Williamson County School Board Meeting

November 17, 2025 6:30 PM

Williamson County Administrative Complex - Auditorium

1. **Call to Order**
    a. Record Attendance
    b. Pledge of Allegiance and a Moment of Silence
2. **Items of Particular Public Interest (Public Comment)**
3. **Approval of Agenda**
4. **Approval of Consent Agenda**
    a. Approval of October 20, 2025 School Board Meeting Minutes
    b. Approval of 2025-26 Hearing Officers
    c. Approval of LEA Compliance Report (Annual Agenda Item)
    d. Approval of TISA Accountability Report (Annual Agenda Item)
    e. Approval of Request to Lease of the Cafeteria at Page High School by Oak Hollow Church of Christ
    f. Approval of Building Model Request Heritage Middle School Storage Building
    g. Approval of Building Model Request Mill Creek Elementary School Shade Structure
    h. Approval of Building Model Request Page High School Locker Room Renovation
    i. Recommendation for Field Trip Fee Requests
5. **Communications to the Board**
    a. Superintendent's Report
        I. Student, Staff and School Spotlights
    b. Board Chair Report
6. **New Business**
    a. Approval of the Five-Year Capital Improvement Plan (Annual Agenda Item)
    b. Approval of the 2026-27 Calendar with Early Release and Late Start Days and the 2027-28 Calendar (Annual Agenda Item)
    c. Board Policies - First Reading
        I. 3.210 Naming of Facilities
        II. 4.600 Report Cards and Grading Systems
    d. Board Policy - Second Reading
        I. 4.401 Textbooks and Instructional Materials
        II. 6.312 Use of Wireless Communication Devices

e. Approval of Board Norms (Annual Agenda Item)
f. Approval of Superintendent's Evaluation Instrument

7. **Adjournment**

Williamson County School Board Meeting
October 20, 2025 6:30 PM
Williamson County Administrative Complex - Auditorium

Attendance Taken at 6:31 PM.

Mr. Drason Beasley:	Present
Mr. Tony Bostic:	Present
Mr. Joshua Brown:	Present
Mr. Dan Cash:	Present
Mrs. Donna Clements:	Present
Dr. Dennis Driggers:	Present
Mr. Jay Galbreath:	Present
Mrs. Tonja Hibma:	Present
Dr. Margie Johnson:	Present
Mrs. Claire Reeves:	Present
Mr. Eric Welch:	Present
Mrs. Melissa Wyatt:	Present

Present: 12.

1. **Call to Order**
Board Chair Brown called the meeting order and asked Board Members to record their attendance. Brown thanked the Sheriff's Deputies, Guy Whitley and Donald Mauck for attending the meeting. He called upon Board Member Beasley to lead the Pledge of Allegiance, followed by a moment of silence.

a. Record Attendance
b. Pledge of Allegiance and a Moment of Silence

2. **Items of Particular Public Interest (Public Comment)**
Board Chair Brown called upon the following individuals who signed up before the meeting began, to speak during public comment.
Holly Algood spoke about textbook selection.
Brad Davis spoke about student safety.
Hillary Stalker spoke about concerns at Sunset Elementary.
Beverly Purvis regarding Freedom to Teach Act and Wireless Communication Devices Policy.

Valerie Dibblee spoke about textbook selection.
Adam Wright spoke about Wireless Communication Policy.
Avery Allen regarding child hunger in Williamson County.

3. **Approval of Agenda**
Board Chair Brown presented the agenda for approval. A voice vote was taken by saying aye.

4. **Approval of Consent Agenda**
Board Chair Brown presented the consent agenda for approval. A voice vote was taken by saying ay.

Motion Passed: Motion by Mrs. Claire Reeves to approve the consent agenda. A second was made by Mrs. Donna Clements.

Mr. Joshua Brown:	Yes
Mr. Jay Galbreath:	Yes
Mrs. Donna Clements:	Yes
Mr. Eric Welch:	Yes
Mr. Drason Beasley:	Yes
Mr. Tony Bostic:	Yes
Dr. Dennis Driggers:	Yes
Mrs. Tonja Hibma:	Yes
Dr. Margie Johnson:	Yes
Mrs. Claire Reeves:	Yes
Mrs. Melissa Wyatt:	Yes
Mr. Dan Cash:	Yes

Yes: 12, Nay: 0

a. Approval of September 15, 2025 School Board Meeting Minutes
b. Board Policies - Second Reading
    I. 3.202 Emergency Preparedness Plan
c. Recommendation for Field Trip Fee Requests

5. **Communications to the Board**
a. Superintendent's Report

Superintendent Golden thanked those who spoke during public comment. He talked about the upcoming textbook adoption process and asked the public to view the October work session to see the presentation. Golden spoke about the Five-Year Capital Plan that will be voted on in November. He thanked the principals for attending and recognized the Scouts in the audience.

I. Student, Staff and School Spotlights
In Student Spotlights, Sunset Middle's Best Buddies Chapter was named the 2024-25 Best Buddies International Outstanding Middle School Chapter of the Year.
Page Middle 2024-25 8th Grade Band was named the 2025 Mark of Excellence Commended Winner by the Foundation for Music and Education.
Woodland Middle School Girls Tennis Team won the TMSAA Tennis State Championship.

Heritage Middle's Asher Salmons won the TMSAA Boys Class AAA Cross Country Individual State Championship.
Sunset Middle's Scotlyn Szabo won the TMSAA Girls Class AAA Individual State Championship.
Legacy Middle's Boys Cross Country team won the TMSAA Boys Class AA Cross Country State Championship.
Woodland Middle's Boys Cross Country team won the TMSAA Boys Class AAA Cross Country State Championship.
Page High's Girls Golf Team won the TSSAA Class AA Girls Golf State Championship.
In Staff Spotlights, Brentwood High's Chris Saunders was named TSSAA Boys Golf Coach of the Year.
Ravenwood High's Ricky Rodriguez was named TSSAA Girls Flag Football Coach of the Year.
Summit High's Pete Miller was named TSSAA Wrestling Coach of the Year.

b. Board Chair Report
Board Chair Brown asked all the Scouts to stand and be recognized.

6. **New Business**
   a. 2025-26 School Board Budget
      I. Approval of the General Purpose School Fund Amendment 10.25 Special Schools Transportation Reimbursement — $136,618.00
      Board Chair Brown called upon Superintendent Golden who recommended approval of the General Purpose School Amendment 10.25 Special Schools Transportation Reimbursement in the amount of $136,618.00.

      Motion Passed: Motion by Mrs. Claire Reeves to approve. A second was made by Mr. Jay Galbreath.

Mr. Jay Galbreath:	Yes
Mrs. Donna Clements:	Yes
Mr. Eric Welch:	Yes
Mr. Drason Beasley:	Yes
Mr. Tony Bostic:	Yes
Dr. Dennis Driggers:	Yes
Mrs. Tonja Hibma:	Yes
Dr. Margie Johnson:	Yes
Mrs. Claire Reeves:	Yes
Mrs. Melissa Wyatt:	Yes
Mr. Dan Cash:	Yes
Mr. Joshua Brown:	Yes

Yes: 12, Nay: 0

II. Approval of the General Purpose School Fund Resolution 11.25 Buses - $3,184,000.00
Board Chair Brown called upon Superintendent Golden, who recommended approval of General Purpose School Resolution 11.25 Buses in the amount of $3,184,000.00.

Motion Passed: Motion by Mr. Tony Bostic to approve. A second was made by Mr. Dan Cash.

Mrs. Donna Clements:	Yes
Mr. Eric Welch:	Yes
Mr. Drason Beasley:	Yes
Mr. Tony Bostic:	Yes
Dr. Dennis Driggers:	Yes
Mrs. Tonja Hibma:	Yes
Dr. Margie Johnson:	Yes
Mrs. Claire Reeves:	Yes
Mrs. Melissa Wyatt:	Yes
Mr. Dan Cash:	Yes
Mr. Joshua Brown:	Yes
Mr. Jay Galbreath:	Yes

Yes: 12, Nay: 0

III. Approval of the General Purpose School Fund Resolution 11.25 Intercategory Transfer Salary 25-26 - $12,465,616.00
Board Chair Brown called upon Superintendent Golden, who recommended approval of the General Purpose School Fund Resolution 11.25 Intercategory Transfer Salary 25-26 in the amount of $12,465,616.00.

Motion Passed: Motion by Mr. Tony Bostic to approve. A second was made by Dr. Dennis Driggers.

Mr. Eric Welch:	Yes
Mr. Drason Beasley:	Yes
Mr. Tony Bostic:	Yes
Dr. Dennis Driggers:	Yes
Mrs. Tonja Hibma:	Yes
Dr. Margie Johnson:	Yes
Mrs. Claire Reeves:	Yes
Mrs. Melissa Wyatt:	Yes
Mr. Dan Cash:	Yes
Mr. Joshua Brown:	Yes
Mr. Jay Galbreath:	Yes
Mrs. Donna Clements:	Yes

Yes: 12, Nay: 0

b. Board Policies - First Reading

I. 4.401 Textbooks and Instructional Materials

Board Chair Brown called upon Superintendent Golden, who recommended approval of Board Policy 4.401 Textbooks and Instructional Materials on first reading.

Motion Passed: Motion by Mrs. Donna Clements to approve on first reading. A second was made by Mrs. Claire Reeves.

Mr. Drason Beasley:	Yes
Mr. Tony Bostic:	Yes
Dr. Dennis Driggers:	Yes
Mrs. Tonja Hibma:	Yes
Dr. Margie Johnson:	Yes
Mrs. Claire Reeves:	Yes
Mrs. Melissa Wyatt:	Yes
Mr. Dan Cash:	Yes
Mr. Joshua Brown:	Yes
Mr. Jay Galbreath:	Yes
Mrs. Donna Clements:	Yes
Mr. Eric Welch:	Yes

Yes: 12, Nay: 0

II. 6.312 Use of Wireless Communication Devices

Board Chair Brown called upon Superintendent Golden, who recommended approval of Board Policy 6.312 Use of Wireless Communication Devices on first reading.

Motion Passed: Motion by Mrs. Claire Reeves to amend the policy on line 3, page 1 to add to take effect on August 1, 2025. A second was made by Mrs. Tonja Hibma.

Mrs. Melissa Wyatt:	Yes
Mr. Dan Cash:	Yes
Mr. Joshua Brown:	Yes
Mr. Jay Galbreath:	Yes
Mrs. Donna Clements:	Yes
Mr. Eric Welch:	Yes
Mr. Drason Beasley:	Nay
Mr. Tony Bostic:	Yes
Dr. Dennis Driggers:	Yes
Mrs. Tonja Hibma:	Yes
Dr. Margie Johnson:	Yes
Mrs. Claire Reeves:	Yes

Yes: 11, Nay: 1

Motion Passed: Motion by Mrs. Claire Reeves to amend the policy on line 3, page 1 to add "**and will take effect on August 1, 2026**". A second was made by Dr. Dennis Driggers.

Mrs. Claire Reeves:	Yes
Mrs. Melissa Wyatt:	Yes
Mr. Dan Cash:	Yes
Mr. Joshua Brown:	Yes
Mr. Jay Galbreath:	Yes
Mrs. Donna Clements:	Yes
Mr. Eric Welch:	Yes
Mr. Drason Beasley:	Nay
Mr. Tony Bostic:	Yes
Dr. Dennis Driggers:	Yes
Mrs. Tonja Hibma:	Yes
Dr. Margie Johnson:	Yes

Yes: 11, Nay: 1

c. Approval of Textbook Committee

Board Chair Brown called upon Superintendent Golden, who recommended approval of Textbook Committee

Motion Passed: Motion by Mrs. Donna Clements to approve. A second was made by Dr. Dennis Driggers.

Mr. Tony Bostic:	Yes
Dr. Dennis Driggers:	Yes
Mrs. Tonja Hibma:	Yes
Dr. Margie Johnson:	Yes
Mrs. Claire Reeves:	Yes
Mrs. Melissa Wyatt:	Yes
Mr. Dan Cash:	Yes
Mr. Joshua Brown:	Yes
Mr. Jay Galbreath:	Yes
Mrs. Donna Clements:	Yes
Mr. Eric Welch:	Yes
Mr. Drason Beasley:	Yes

Yes: 12, Nay: 0

d. Approval of 2025-26 Superintendent / District Goals (Annual Agenda Item)

Chairman Brown called upon Superintendent Golden, who recommended approval of the 2025-26 Superintendent / District Goals. This is an Annual Agenda Item.

Motion Passed: Motion by Mr. Jay Galbreath to approve. A second was made by Mrs. Tonja Hibma.

Mrs. Tonja Hibma:	Yes
Dr. Margie Johnson:	Yes
Mrs. Claire Reeves:	Yes
Mrs. Melissa Wyatt:	Yes
Mr. Dan Cash:	Yes
Mr. Joshua Brown:	Yes
Mr. Jay Galbreath:	Yes
Mrs. Donna Clements:	Yes
Mr. Eric Welch:	Yes
Mr. Drason Beasley:	Yes
Mr. Tony Bostic:	Yes
Dr. Dennis Driggers:	Yes

Yes: 12, Nay: 0

Motion Withdrawn: Motion by Dr. Margie Johnson to strike goal #1 due to funding. A second was made by Mr. Tony Bostic.

e. Approval of Board Goals / Affirm Strategic Plan (Annual Agenda Item)

Chairman Brown called upon Superintendent Golden, who recommended approval of the 2025-26 Board Goals / Affirm Strategic Plan. This is an Annual Agenda Item.

Motion Passed: Motion by Mrs. Donna Clements to approve. A second was made by Mrs. Claire Reeves.

Dr. Margie Johnson:	Yes
Mrs. Claire Reeves:	Yes
Mrs. Melissa Wyatt:	Yes
Mr. Dan Cash:	Yes
Mr. Joshua Brown:	Yes
Mr. Jay Galbreath:	Yes
Mrs. Donna Clements:	Yes
Mr. Eric Welch:	Yes
Mr. Drason Beasley:	Yes
Mr. Tony Bostic:	Yes
Dr. Dennis Driggers:	Yes
Mrs. Tonja Hibma:	Yes

Yes: 12, Nay: 0

7. **Adjournment**

There being no further business, Board Chair Brown adjourned the meeting at 7:56 p.m.

_____

Chairperson

_____

Superintendent

1320 West Main Street, Suite 202
Franklin, Tennessee 37064-3700
Phone (615) 472-4000
Fax (615) 472-4190
Website: http://www.wcs.edu

MEMORANDUM

DATE: November 5, 2025

TO: Williamson County School Board

FROM: Dana Ausbrooks, General Counsel

CC: Jason Golden, Superintendent of Schools

RE: List of Hearing Officers

The Board must approve impartial hearing officers. TSBA complies a list of dismissal hearing officers annually. Attached is the 2025 list of hearing officers from TSBA.

WCS staff recommends approval of the 2025 Hearing Officers List.

EAST	MIDDLE	WEST
D. Scott Bennett Bennett & DeCamp, PLLC Flatiron Building 707 Georgia Avenue, Ste. 300 Chattanooga, TN 37402 423-498-3791 dsb@bennettdecamp.com	**Randall Bennett** Law Office of Randall Bennett 3663 Shores Road Murfreesboro, TN 37128 Phone 615-838-2579 rgblaw@comcast.net	**Dale Conder, Jr** Rainey Kizer Reviere & Bell PLC 209 E. Main St. Jackson, TN 38302 731-426-8130 dconder@raineykizer.com
J. Michael Billingsley City of Kingsport Attorney 1324 Midland Dr. Kingsport, TN 37664 423-229-9464 mikebillingsley@kingsporttn.gov	**Samuel Jackson** Spencer Fane 511 Union Street Ste. 1600 Nashville, TN 37219 615-238-6312 sjackson@spencerfane.com	**Christopher C. Hayden** Purcell Sellers & Craig PO Box 10537 45 Murray Guard Drive Jackson, TN 38308 731-300-0737 chris@psclegal.com
Mary DeCamp Bennett & DeCamp, PLLC Flatiron Building 707 Georgia Avenue, Ste. 300 Chattanooga, TN 37402 423-498-3789 mcd@bennettdecamp.com	**Michael R. Jennings** 326 North Cumberland St. Lebanon, TN 37087 615-444-0585 mjenningslaw@aol.com	**Thomas M. Minor** Minor Johnston Douglas, PLLC 124 E. Market St. Somerville, TN 38068 901-465-3117 tminor@minordouglas.com
John C. Duffy P.O. Box 11007 Knoxville, TN 37939-1007 jduffy@johncduffy.com 865-766-0904	**Gerald B. Kirksey** Kirksey & Cron, PLC 5214 Virginia Way, Ste. 207 Brentwood, TN 37027 615-369-9991 gkirksey@kirkcron.com	**Debra Owen** Jackson Shields Yeiser & Holt 262 German Oak Dr. Cordova, TN 38018 901-754-8001 dowen@jsyc.com
E. Patrick Hull 229 E. New Street Kingsport, TN 37660 423-247-6151 pat.hullfirm@gmail.com		**Stephen L. Shields** Jackson Shields Yeiser & Holt 262 German Oak Dr. Cordova, TN 38018 901-754-8001 sshields@jsyh.com
Arthur F. Knight III Taylor & Knight, G.P. 800 S. Gay St. Suite 600 Knoxville, TN 37929 865-971-1702 aknight@taylornightlaw.com		**Valerie Speakman** General Counsel Arlington Community Schools 12060 Arlington Trail Arlington, TN 38002 901-389-2497 ext. 2032 valerie.speakman@acsk-12.org

Chris McCarty
Lewis Thomason, P.C.
620 Market St.
Knoxville, TN 37901
865-541-5256
cmmcarty@lewisthomason.com

Marshall A. Raines
Swafford Jenkins & Raines
32 Courthouse Square
Jasper, TN 37347
423-942-3168
mrainesjr@sjrlaw.net

H. Scott Reams
Taylor Reams Tilson & Harrison
116 E. Main St.
Morristown, TN 37814
423-586-9302
hsreams@trthatty.com

Mary Ann Stackhouse
Lewis Thomason King Krieg Waldrop
620 Market St. 5th Floor PO Box 2425
Knoxville, TN 37901
865-541-5261
mstackhouse@lewisthomason.com

David M. Tilson
Taylor Reams Tilson & Harrison
116 E. Main St.
Morristown, TN 37814
423-586-9302
dmtilson@trthatty.com

Clifton Miller
Henry McCord Bean Miller Gabriel & Labar
300 North Jackson St.
Tullahoma, TN 37388
931-455-9301
cmiller@henry-mccord.com

Marietta Shipley
Mediator-Attorney-Former Judge
2809 Wimbledon Road
Nashville, TN 37215
615-292-6069
marietta@mariettashipley.com

Tom Stovall
East, West and Middle
2504 Essex Place
Nashville, TN 37212
615-594-1724
tomgstovall@gmail.com

Mark C. Travis
Arbitrator and Mediator
P.O. Box 2460
Cookeville, TN 38502
931-252-9123
mtravis@travisadr.com

J. Christopher Williams
Williams Law and Mediation Group
101 South First St.
Pulaski, TN 38478
931-363-6500
cwilliams@newsouthlaw.com

T. Jake Wolaver
Wolaver, Carter & Heffington
809 S. Main St. Ste. 100
Columbia, TN 38401
931-548-0818
jwolaver@mtlawgroup.net

Jonathan O. Steen
Spragins, Barnett & Cobb, PLC
312 East Lafayette Street
Jackson, TN 38301
731-424-0461
jsteen@spraginslaw.com

R. Dale Thomas
Rainey Kizer Reviere & Bell PLC
209 E. Main St.
Jackson, TN 38301
731-426-8120
dthomas@raineykizer.com

Robert G. Wheeler, Jr.
The Law Office of Robert G. Wheeler, Jr.
P.O. Box 211
Goodlettsville, TN 37070
615-275-9992
Rob@rwheelerlaw.com

1320 West Main Street, Suite 202
Franklin, Tennessee 37064-3700
Phone (615) 472-4000
Fax (615) 472-4190
Website: http://www.wcs.edu

MEMORANDUM

DATE: November 5, 2025

TO: Williamson County School Board

FROM: Dana Ausbrooks, General Counsel

CC: Jason Golden, Superintendent of Schools

RE: 2025 LEA Compliance Report

Attached is the 2025 LEA Compliance Report from the Tennessee Department of Education, due on November 28, 2025.

Since 2012, the Tennessee Department of Education has required each public school board to approve an annual Compliance Report confirming that each Local Education Agency (LEA) is complying with all Tennessee laws, Rules and Regulations, etc. applicable to public schools. Appendix B of the attached form includes links to this year's legislative report, the entire Tennessee Code, the TN Rules and Regulations, etc. Since this law was enacted, we and virtually every other LEA in the State have reported full compliance.

We have reviewed the laws and rules related to education, with a special emphasis on laws passed in 2025, and we are not aware of any education laws or State Board of Education rules with which we are not in compliance.

Staff recommends approval of the 2025 LEA Compliance Report.

TN Department of Education

2025 Local Education Agency Compliance Report

Local education agencies (LEAs) are required to comply with all federal and state education laws and State Board of Education (SBE) rules. This annual compliance report is one mechanism the department uses to ensure education laws and rules are faithfully executed. The commissioner of education is charged with taking corrective action when an LEA is noncompliant with those laws and rules or is not following a department-approved compliance plan.

Each LEA must submit this report and, if applicable, the corresponding corrective action plan, to the department by **November 28, 2025**. During completion, an LEA should carefully check the status of its compliance with all federal and state education laws and SBE rules. The department monitors and verifies LEA compliance via multiple data sources (e.g., Education Information System, internal program managers) and will consider those sources in making a final determination of an LEA's compliance. Please be advised annual compliance report data may inform an LEA's approval classification.

- (●) I certify that the LEA is in compliance with all federal and state education laws and SBE rules.
- ( ) I certify that, with the exception of areas indicated in the **attached corrective action plan**, the LEA is in compliance with all federal and state education laws and SBE rules.

LEA Name: Williamson County Schools

Director of Schools/Superintendent Name: Jason A Golden

Director of Schools/Superintendent Signature:

School Board Chair Name: Josh Brown

School Board Chair Signature:

Date of School Board Approval:

UPLOAD COMPLETED REPORT TO ePlan BY NOVEMBER 28, 2025
(including the corresponding corrective action plan if applicable).
Upload instructions are accessible here.

Department of Education

Appendix A

2025 Noncompliance Corrective Action Plan

Instructions: Below is a screenshot of the corrective action plan template. The actual template, which is provided here in Word format, includes an example and can also be accessed by downloading and opening this PDF and then clicking the attachment (paper clip) icon in the navigation pane.

Additionally, the current edition of *Commissioner's Update for Directors* includes individual links to the compliance report, corrective action plan template, and ePlan submission instructions.

Area of Noncompliance	Scope and Reason(s) for Noncompliance	Corrective Action Step(s)	Person(s) Responsible	Anticipated Completion Date(s)
T.C.A. § 49-5-413(a) (background checks)	An internal audit conducted on October 1, 2025, revealed eleven (13) employees with an expired background check.	▪ Notify the thirteen (13) impacted employees and their managers of the noncompliance in writing and include next steps. ▪ Coordinate fingerprinting scheduling, results processing, and related communications. ▪ Notify the TDOE director of LEA approval of corrective action plan completion.	Human Resources Director Human Resources Director Human Resources Director (with director of schools copied)	Oct. 15, 2025 Oct. 15 – Oct. 29, 2025 Nov. 3, 2025

EXAMPLE

Appendix B

The following is a list of helpful links to state education laws and SBE rules:

Public chapters regarding education passed during the 2025 legislative session:
https://www.tn.gov/content/dam/tn/education/legal/2025%20Legislative%20Report.pdf

Current and pending SBE rules:
https://www.tn.gov/sbe/rules--policies-and-guidance.html

Tennessee Code Annotated:
http://www.lexisnexis.com/hottopics/tncode/

If you have questions regarding education laws or SBE rules, please contact the department's general counsel, Christy Ballard, at (615) 741-2921 or Christy.Ballard@tn.gov.

1320 West Main Street Suite202
Franklin, Tennessee 37064-3700
Phone (615) 472-4000
Website: http://www.wcs.edu

MEMORANDUM

TO: Williamson County School Board

FROM: Dave Allen, Assistant Superintendent of Teaching, Learning and Assessment

DATE: October 31, 2025

RE: TISA Accountability Report

The Tennessee Investment in Student Achievement (TISA) Act legislation (TCA 49-3-112) requires each district to submit a TISA Accountability Report annually to summarize the academic goals being addressed with TISA funding. This report requires Board approval and is an annual agenda item.

Staff recommends approval.

Goal #1

Williamson County (940) Public District - FY 2026 - TISA Accountability Report - Rev 0

Goal Statement 1: 3rd Grade ELA Proficiency

79 %	of students will score proficient on the 3rd grade ELA TCAP by	Year 2028

District Goal 1

Year	Annual Outcome Target(s)	Associated Metrics/Data
Year 1: 2023-2024 school year (Previous outcome)	70% of students scored proficient (met or exceeded expectations) on the 3rd grade ELA TCAP	Percent of 3rd grade students meeting or exceeding expectations on the Grade 3 TCAP Assessment
Year 2: 2024-2025 school year (Use actual outcome)	72.2% of students scored proficient (met or exceeded expectations) on the 3rd grade ELA TCAP	Percent of 3rd grade students meeting or exceeding expectations on the Grade 3 TCAP Assessment
Year 3: 2025-2026 school year	75% of students will score proficient (meet or exceeded expectations) on the 3rd grade ELA TCAP by 2026	Percent of 3rd grade students meeting or exceeding expectations on the Grade 3 TCAP Assessment
Year 4: 2026-2027 school year	77% of students will score proficient (meet or exceeded expectations) on the 3rd grade ELA TCAP by 2027	Percent of 3rd grade students meeting or exceeding expectations on the Grade 3 TCAP Assessment
Year 5: 2027-2028 school year	79% of students will score proficient (meet or exceeded expectations) on the 3rd grade ELA TCAP by 2028	Percent of 3rd grade students meeting or exceeding expectations on the Grade 3 TCAP Assessment

* Check the response that best describes the progress made on the 2024-25 target toward Goal 1.

- (●) Exceeded target
- ( ) Met target
- ( ) Increased but did not meet target
- ( ) Did not make progress toward target
- ( ) End of year outcome data for 2024-25 is unavailable at the time of this report

Reflection: Based on progress toward the goal, how will this impact your action plan for the coming years?

Our district set a goal for 72% of 3rd grade students to score proficient on the ELA TCAP by the 2025 school year. We exceeded this goal, with 72.2% of students achieving proficiency on the Spring 2025 assessment.
For the 2025-26 school year, we will:
Continue professional development focused on content standards identified as areas for growth.
Use PLC teams to implement Tier 1 interventions guided by common formative assessment data.
Support Tier 3 students through targeted interventions based on universal screener and classroom data.
Provide focused support to schools with the lowest proficiency rates, including instructional strategies and literacy skill development in grades K-2 to better prepare students for 3rd grade reading expectations.

Goal 1 Prior Year Report: 2-3 Prior year, major TISA investments made toward this goal

Major TISA Investment	Expended Amount (Rough Estimate)	Reflection of whether the investment contributed to progressing toward the goal or not, and how so.
1-Training from The Instructional Coaching Group throughout the school year for Elementary Literacy Coaches and district leaders to increase their capacity in instructional coaching while utilizing IPG walkthrough data and teacher selected goals. Approximate cost of training & materials ($11,500) 2- Common formative assessments are created in Performance Matters, a district-purchased assessment platform. The use of this platform allows the district to provide standard-aligned assessment banks that house assessment items vetted for rigor and standard alignment. Our elementary ELA teachers are required to use this platform to assess students' progress toward state standards. ($26,000) 3- Our LEA budget includes funding for RTI Interventionists and literacy coaches at every elementary school. RTI Interventionists work directly with students to close gaps that are barriers to accessing Tier 1 instruction in ELA. Approximate cost to intervene with 3rd graders ($900,000)	$ 937,500.00	Our district set a goal for 72% of 3rd grade students to score proficient on the ELA TCAP by the 2025 school year. We are proud to report that we exceeded this goal, with 72.2% of students achieving proficiency on the Spring 2025 assessment. This success is the result of strategic investments and targeted instructional support, including the following: - Instructional Coaching & Professional Development - Standards-Aligned Assessment Practices - Targeted Student Support Our investment using TISA funds in these supports directly contributed to our students surpassing the district's ELA proficiency goal.

Action Plan: List detailed strategies for the 2025-2026 school year that will be implemented to meet your annual target.

Instructional Coaching & Continued Implementation of High Quality Instructional Materials
- Continue to utilize the district-provided high-quality instructional materials. We will leverage the Instructional Practice Guide (IPG) feedback as a catalyst for the ongoing cycle of instructional improvement through coaching. Teachers use this data to identify areas of growth, set instructional goals and partner with their literacy coach to engage in cycles of continuous improvement. Our district conducts IPG walkthroughs with building level administrators, instructional coaches, and district leadership to provide feedback and ensure consistency across the district.

Professional Learning Communities
- Collaborate in PLC teams to develop pacing guides and common formative assessments. The pacing guides, which will encompass all Tennessee State Standards to be taught and assessed throughout the year, will be prepared before the school year begins.
- After administering the CFAs, the teams will convene for a data meeting to analyze the assessment results and design interventions and extensions based on the data.

Tier I Intervention
- Professional Learning Teams will use Universal Screener data in addition to Common Formative Assessment data to create specific timely intervention plans for those students who need skills interventions despite not qualifying for RTI Tier 2.

Budget Narrative: Describe how your district intends to use their budget to execute the strategies and meet the stated goal.

Salaries for elementary school staff, including
- Literacy coaches at each school building
- Interventionists who work with students that have skill deficits interfering with grade level acquisition
- District Curriculum Specialists who train Literacy Coaches and participate in IPG walkthroughs and provide coaching based on the IPG data

Our LEA budget funds our assessment platform, currently, Performance Matters.
We utilize this platform to create, vet, and house assessment items that are aligned

to the rigor and standard expectation. This assessment data is used to provide Tier 1 interventions to ensure students are progressing toward the state standards.

To evaluate the impact of our coaching program, the district will implement an application that tracks effectiveness. This system will help identify instructional practices and strategies that lead to measurable student outcomes.

Goal #2

Williamson County (940) Public District - FY 2026 - TISA Accountability Report - Rev 0

Goal Statement 2:

50% of Grade 9-12 students will meet or exceed expectations on the Algebra I EOC by 2028

District Goal 2

Year	Annual Outcome Target(s)	Associated Metrics/Data
Year 1: 2023-2024 school year (Previous outcome)	42% of Grade 9-12 students met or exceed expectations on the Algebra I EOC in 2024	Percent of students in grades 9-12 meeting or exceeding expectations on the Algebra I TCAP Assessment (this data does not include middle school students who take Algebra I in the accelerated math pathway)
Year 2: 2024-2025 school year (Use actual outcome)	42% of Grade 9-12 students met or exceed expectations on the Algebra I EOC in 2025	Percent of students in grades 9-12 meeting or exceeding expectations on the Algebra I TCAP Assessment (this data does not include middle school students who take Algebra I in the accelerated math pathway)
Year 3: 2025-2026 school year	46% of Grade 9-12 students will meet or exceed expectations on the Algebra I EOC by 2028	Percent of students in grades 9-12 meeting or exceeding expectations on the Algebra I TCAP Assessment (this data does not include middle school students who take Algebra I in the accelerated math pathway)
Year 4: 2026-2027 school year	48% of Grade 9-12 students will meet or exceed expectations on the Algebra I EOC by 2028	Percent of students in grades 9-12 meeting or exceeding expectations on the Algebra I TCAP Assessment (this data does not include middle school students who take Algebra I in the accelerated math pathway)
Year 5: 2027-2028 school year	50% of Grade 9-12 students will meet or exceed expectations on the Algebra I EOC by 2028	Percent of students in grades 9-12 meeting or exceeding expectations on the Algebra I TCAP Assessment (this data does not include middle school students who take Algebra I in the accelerated math pathway)

* Check the response that best describes the progress made on the 2024-25 target toward Goal 2.

- ○ Exceeded target
- ○ Met target
- ○ Increased but did not meet target
- ◉ Did not make progress toward goal
- ○ End of year outcome data for the 2024-25SY is unavailable at the time of this report

Reflection: Based on progress toward the goal, how will this impact your action plan for the coming years?

We did not meet our district goal of having 46% of grades 9-12 students meet or exceed expectations on the Algebra I EOC. We maintained the same percent as the previous year having 42% of students in grades 9-12 meet or exceed expectations on the Algebra I EOC.
Based on this data, we will continue the execution of a multi-year plan to support Algebra I teachers and students. The emphasis in our plan is to provide ongoing professional development for teachers focused on high impact instructional practices/strategies and the implementation of our HQIM.
In 2024 our district leadership assembled a team that analyzed our Algebra I data and created a plan to train our Algebra I teachers in building conceptual

understanding and implementing out LEA adopted HQIM. We had significant gains in 2024 after executing our plans but maintained that achievement results in 2025.

Goal 2 Prior Year Report: 2-3 Prior year, major TISA investments made toward this goal

Major TISA Investment	Expended Amount (Rough Estimate)	Reflection of whether the investment contributed to progressing toward the goal or not, and how so.
1- Professional Development - sustained training was delivered to Algebra I teachers throughout the school year. This included a series of "just in time" PD. Professional development was also provided to middle school math teachers and math coaches to deepen their understanding of the grades 6-8 math standards that directly impact the progression into Algebra I. PD was provided by our math curriculum specialist in collaboration with a consultant. Approximate cost of substitutes, consultant and training materials ($30,000) 2- Salaries of middle school math coaches ($840,000) 3- Salaries of Secondary Math Curriculum Specialist and an Assessment Analyst ($300,000)	$ 1,170,000.00	Our IPG walkthrough data indicates that middle school and Algebra I teachers are implementing the strategies taught and modeled in our district Algebra I PD. We also see evidence of implementation of our district adopted HQIM across secondary schools. We had a significant improvement in our grades 9-12 Algebra I EOC data the previous year and plan to move forward with additional PD to support new and existing Algebra I teachers.

Action Plan: List detailed strategies for the 2025-2026 school year that will be implemented to meet your annual target.

Implementation of High Quality Instructional Material
- Math teachers will implement adopted, WCS board approved, high-quality instructional materials for K-12 math.
- Teachers will continue being trained in the use and best implementation strategies of these materials, including the intervention components embedded in the materials.

Team Analysis of Common Assessment
- Algebra I teachers will continue participating in PLC teams to analyze the data immediately following the administration of a common formative assessment.
- The teams will focus on questions 3 and 4 in the PLC framework, creating action plans for the intervention of students who have not mastered assessed standards and extensions for students who have already mastered the assessed standards.

Math Intervention Alignment for students with disabilities
- The Student Support Services (SSS) math coach, in collaboration with special education math intervention providers and the Curriculum Department secondary math specialist, will identify and implement the use of the best aligned resources, tools and strategies that match student's deficits that impact them in middle school math and Algebra I.

Budget Narrative: Describe how your district intends to use their budget to execute the strategies and meet the stated goal.

Our LEA budget includes funding for our math curriculum specialist and math coaches at every middle school. We utilize this staff to create and deliver professional learning for math teachers. In addition, we collaborate with math consultants to create and plan for the delivery of professional development for middle school math and Algebra I teachers.

Our budget also funds our assessment platform, currently, Performance Matters. We utilize this platform to create, vet, and house assessment items that align to the rigor and standard expectation. This assessment data is used to provide Tier 1 interventions to ensure students are progressing toward mastery of the state standards.

Goal #3

Williamson County (940) Public District - FY 2026 - TISA Accountability Report - Rev 0

☐ This goal not established.

Goal Statement 3:

Increase college and career readiness to achieve an 82.6% Ready Graduate rate for the Class of 2028.

District Goal 3

Year	Annual Outcome Target(s)	Associated Metrics/Data
Year 1: 2023-2024 school year (Previous outcome)	2023 cohort Ready Graduate rate: 75.1% *(Due to lagging data)	State accountability Ready Graduate score for the year's graduation cohort.
Year 2: 2024-2025 school year (Use actual outcome)	2024 cohort Ready Graduate rate: 77.8% *(Due to lagging data)	State accountability Ready Graduate score for the year's graduation cohort.
Year 3: 2025-2026 school year	Increase college and career readiness to achieve a 79.4% Ready Graduate rate for the Class of 2025. *(Due to lagging data)	State accountability Ready Graduate score for the year's graduation cohort.
Year 4: 2026-2027 school year	Increase college and career readiness to achieve an 80.9% Ready Graduate rate for the Class of 2026. *(Due to lagging data)	State accountability Ready Graduate score for the year's graduation cohort.
Year 5: 2027-2028 school year	Increase college and career readiness to achieve an 82.6% Ready Graduate rate for the Class of 2027. *(Due to lagging data)	State accountability Ready Graduate score for the year's graduation cohort.

* Check the response that best describes the progress made on the 2024-25 target toward Goal 3.

- ◉ Exceeded target
- ○ Met target
- ○ Increased but did not meet target
- ○ Did not make progress toward goal
- ○ End of year outcome data for the 2024-25SY is unavailable at the time of this report

Reflection: Based on progress toward the goal, how will this impact your action plan for the coming years?

The Class of 2024 achieved a Ready Graduate score of 77.8%, surpassing our goal of a 2% increase from the 2023 score of 75.1%. Our updated three-year goal is to raise this metric by 2% annually. We remain committed to long-term strategies that enhance career and college readiness for all graduates.

Goal 3 Prior Year Report: 2-3 Prior year, major TISA investments made toward this goal

Major TISA Investment	Expended Amount (Rough Estimate)	Reflection of whether the investment contributed to progressing toward the goal or not, and how so.
1- College & Career Readiness Specialist Salary ($110,000) 2- Summer school ACT prep courses and materials ($30,000) 3- Staff at Entrepreneurship Innovation Hub - Two CTE/EIC Assistant Directors ($220,000)	$ 340,000.00	Our strategic investments in college and career readiness-ranging from expanded dual enrollment opportunities to targeted ACT support-have directly contributed to exceeding our district goal of a 2% annual increase in the Ready Graduate rate. These efforts reflect our commitment to preparing students for postsecondary success and strengthening outcomes across all high schools.

Action Plan: List detailed strategies for the 2025-2026 school year that will be implemented to meet your annual target.

The WCS College and Career Readiness Specialist meets with each high school to establish aspirational goals for ACT performance and college/career exploration.
Each high school receives a dedicated budget to purchase ACT prep materials aligned with their goals and designed to support all students.
We maintain the WCS College and Career Readiness website, providing accessible review materials and resources for students and teachers.
PSAT and ACT workshops are offered during summer and on Saturdays, open to all students across the district.
Each school's College and Career Readiness representative collaborates with the district specialist to support CCR initiatives locally.
Continue to grow dual enrollment opportunities, including new programs in Teaching as a Profession and Early Childhood Education, through a partnership with Lipscomb University.
Middle schools now offer Level 1 CTE courses that feed into high school pathways, promoting real-world learning and increasing student completion and concentration rates.
We are expanding the number of industry-recognized credentials available within CTE pathways to better prepare students for workforce entry.
Opening in August 2026, the Innovation Center will introduce five new programs of study: Aviation, Hospitality & Tourism, Cybersecurity, Fire Management Services, and Advanced Power & Machinery.

Budget Narrative: Describe how your district intends to use their budget to execute the strategies and meet the stated goal.

Salaries for our College and Career Readiness Specialist and CTE and EIC Assistant Directors
Equipment and resources for our CCTE courses
Summer programs to prepare students for ACT and PSAT
Costs associated with the opening of our new Innovation Center in 2026

Facilities & Construction
1320 West Main Street, Suite 202
Franklin, TN 37064
Tel. (615)-472-4041
Fax (615)-472-5622

M E M O R A N D U M

DATE: November 13, 2025

TO: School Board Members

FROM: Eric Gardner
Director of Facilities & Construction

CC: Jason Golden, Superintendent

RE: Oak Hollow Church of Christ at Page High School

Oak Hollow Church of Christ has requested use of Page High School for worship services for an extended period of time. This request is governed under WCS School Board Policy 3.206 and related administrative guidelines. The lease request is for the following:

- Cafeteria
- Use period – Weekly on Sunday for worship services.
- Term of lease – November 23, 2025 to November 22, 2026, with renewal each year thereafter to a maximum of 6 years total (November 22, 2031).
- The tenant will be required to reimburse WCS for all use fees and building supervision not waived.

Staff recommends approval.

OAK HOLLOW CHURCH OF CHRIST

Entity Type: Nonprofit Corporation
Formed in: TENNESSEE
Term of Duration: Perpetual
Religious Type: Religious
Benefit Type: Public Benefit Corporation

Status: Active
Control Number: 002054587
Initial Filing Date: 10/2/2025 12:48:45 PM
Fiscal Ending Month: December
AR Due Date: 04/01/2026

Registered Agent

RANDY WOOTEN
209 Jaclyn Ct
Franklin, TN 37064

Principal Office Address

2774 Owl Hollow Rd
Franklin, TN 37064

Mailing Address

2774 Owl Hollow Rd
Franklin, TN 37064

AR Standing: Good | RA Standing: Good | Other Standing: Good | Revenue Standing: N/A

History (1)

LEASE

THIS LEASE made and entered into this 17th day of November, 2025, between Williamson County Board of Education, hereinafter called "Landlord' and Oak Hollow Church of Christ, hereinafter called "Tenant".

WITNESSETH:

FOR AND in consideration of the rentals, undertakings and mutual covenants hereinafter set forth, Landlord hereby leases to Tenant, and Tenant hereby leases from Landlord, subject to the terms and conditions hereinafter expressed, certain portions of improved real estate located in Williamson County, Tennessee, and described more particularly as:

Name:	Page High School
Address:	6281 Arno Road Franklin, TN 37064
Description of Space:	Cafeteria

Said improved real estate is hereinafter referred to sometimes as the "leased premises." TO USE the leased premises, together with the improvements and appurtenances thereto belonging, unto Tenant, its successors and assigns for a term of 12 months, beginning November 23, 2025 and ending November 22, 2026, unless sooner terminated as hereinafter provided. Said lease may be extended for a term not to exceed five (5) annual renewals at the discretion of the Landlord upon application by the Tenant. The terms of this lease shall be subject to all Board of Education policies as amended from time to time.

THE PARTIES HERETO MUTUALLY COVENANT AND AGREE AS FOLLOWS, THIS LEASE BEING EXPRESSLY SUBJECT TO THE TERMS AND CONDITIONS HEREINAFTER SET OUT:

1. Rent. Tenant agrees to pay to Landlord for the leased premises during the term hereof basic rent at the rate of seven thousand twenty dollars and zero cents ($7,020.00) per annum, payable in twelve (12) installments of approximately five hundred eighty five dollars and zero cents ($585.00) per month. All rentals are payable in advance on the first day of each and every month and shall be payable without notice or demand and without deduction, set-off or abatement except as otherwise provided specifically in this Lease. The amount of rent designated herein is subject to change as the areas requested for use in the premises change. All areas used and charges therefore shall be designated in an exhibit to be attached to the lease. Changes in the rental amount resulting from changes in the space the Tenant wishes to lease shall be effectuated by amendment to the original exhibit and shall not constitute a new lease nor shall it extend any lease into which Landlord and Tenant have entered. Applicable fees will be charged for building supervision, custodial services, supplies, cafeteria use, WCS food service employees, and manager fees. Tenant agrees to pay the amounts billed for any said expenses. The Tenant and Landlord agree that the following areas of the premises are leased on the days of the week noted for the agreed to period of lease.

Name of School: Page High School
Areas to be Used: Cafeteria
Use period: Sunday Each Week Beginning November 23, 2025 through November 22, 2026.
Estimated Supervision Cost: $ 4,264.00 per annum
Estimated Custodial Cost: $ 5,980.00 per annum

The Tenant agrees that no other areas of the building may be used without authorization, in writing and amended to this lease agreement. The time period the building may be occupied is an eight (8) hour period per day, beginning not before 7:00 A.M. and ending by 6:00 P.M.

2. Conditions. Tenant agrees that it has examined the leased premises and accepts the same in their present state and condition as of the date hereof without any representations or warranties, express or implied, in fact or in law, by Landlord as to the nature, condition or usability thereof or as to the use or uses to which the leased premises may be put. Williamson County Schools does not warrant that the facility is being currently maintained and will not be responsible for inspection and maintenance of the facility while it is being used by Tenant.

3. Signage. Tenant shall not be permitted to place signage over any signs erected by Williamson County Schools that are used to identify the property. Tenant further agrees that no temporary signage shall be placed upon property without the express written consent of the school district. Should the district agree to allow signage, it shall be in accordance with the written conditions set forth by the district, county, city and other governing agencies. Tenant shall be responsible for all permits and fees for signage. Signs may not be erected more than twenty-four hours before usage of the facility and must be promptly removed upon completion of the use.

4. Use. Tenant agrees that it will not use or allow the leased premises or any part thereof to be used or occupied for any unlawful purpose or any purpose contrary to the published policies of the Williamson County Board of Education and will not permit any act to be done or any condition to exist on the leased premises which may constitute a nuisance, public or private, or which may make void or voidable any insurance then in force with respect to the leased premises. Tenant agrees that it will comply promptly with all laws and regulations of federal, state and municipal authorities applicable to the leased premises and to the business conducted thereon.

5. Improvements and Repairs. Landlord shall have no obligation of any kind, nature or description with respect to the leased premises or any improvements thereon. No structural alterations of, or additions to, any improvements currently on the leased premises or the construction or placement of any other improvements upon the leased premises shall be made by Tenant. Tenant covenants that at no time during the term hereof will it create, or permit to be created or to remain, and will promptly discharge, any lien, encumbrance or charge upon the leased premises.

6. Assumption of Risk. Tenant shall, and does hereby, assume all risks of loss or injury to the property or person of all persons at any time coming upon the leased premises during the term hereof and Tenant shall, and does hereby agree to, indemnify and save harmless Landlord for and from any and all claims, demands, suits, judgment costs or expenses on account of any such loss or injury and any loss or injury which arise from any failure of Tenant, its officers, agents or employees to obey any applicable laws. Tenant shall be responsible for any attorney's fees and costs of Landlord incurred as a result of any such loss. To that end, Tenant shall, at its own cost and expense, maintain general public liability insurance for and on the leased premises, naming itself and Landlord as insured parties, with limits of not less than one million dollars ($I,000,000) per occurrence for bodily injury or

death and one million dollars ($1,000,000) per occurrence for property damage. Such insurance shall be affected by a valid and enforceable policy or policies issued by an insurance company of recognized responsibility licensed to do business in the State of Tennessee and shall contain a provision that coverage cannot be cancelled without ten (10) days' written notice to Landlord. Tenant shall furnish to Landlord a copy of such policy or policies evidencing that the required insurance is in full force and effect.

7. Damage or Destruction. Tenant shall at all times during the term hereof, at its own cost and expense, insure and keep in fill force and effect on any improvements situated on the leased premises a policy or policies of fire and casualty insurance (extended coverage) in the minimum amount of one million dollars ($1,000,000). Such policy or policies shall name Landlord as the loss payee and shall contain a provision that coverage cannot be cancelled without ten (10) days' written notice to Landlord. Such insurance shall be effected by a valid and enforceable policy or policies issued by an insurance company of recognized responsibility doing business in the State of Tennessee, and Tenant shall furnish to Landlord a copy of such policy or policies evidencing that the required insurance is in full force and effect. In the event said improvements are destroyed or damaged by fire or other casualty to the extent that Tenant cannot continue to operate and occupy any portion thereof, Landlord may, at is option, elect to rebuild, replace or restore the improvements or may elect not to do so. The basic rental payments hereunder shall cease as of the date of total destruction of said improvements and shall not commence again until the same have been repaired or replaced. In the event said improvements are destroyed and Landlord elects not to rebuild, restore or replace, then this Lease shall be terminated upon the date of such destruction and all insurance proceeds shall be retained by Landlord as its own.

8. Condemnation. If the whole of the leased premises, or such portion thereof as will make the leased premises unsuitable for Tenant's purposes, is condemned for any public use or purpose of any legally constituted authority, this Lease shall be terminated automatically upon the date when possession is taken by such public authority, and rent shall be accounted for between Landlord and Tenant as of the date of surrender of possession. In the event only a portion of the leased premises is condemned for any public use or purpose without rendering the leased premises unsuitable for the purposes of Tenant, there shall be no termination of the Lease on such account and no abatement of rent. Any and all monetary awards for the taking of the leased premises by eminent domain or under the threat thereof and for incidental damages thereto shall belong to and inure to the exclusive benefit of Landlord.

9. Quiet Enjoyment. Landlord covenants that it has good title to the leased premises and is under no disability which would impair its right to enter into this Lease. Tenant, upon the payment of the rent herein provided and upon performance of all the terms and conditions hereof shall quietly have and enjoy the leased premises during the term hereof without hindrance by or disturbance from Landlord or anyone claiming by or through Landlord.

10. Surrender. Tenant shall, upon the last day of the term or upon the sooner termination as herein provided, peaceably and quietly surrender the leased premises to Landlord, including all improvements thereon, in as good condition and repair as at the commencement of the term, normal wear and tear excepted. Tenant may, upon the termination of this Lease if it is not in default hereunder, remove from the leased premises all movable trade fixtures and equipment installed by Tenant thereon, provided any damage or other injury to the leased premises resulting from such removal be adequately repaired and the leased premises fully restored by Tenant. All such fixtures and equipment not removed promptly by Tenant upon the termination hereof shall become the property of Landlord.

11. Termination and Landlord's Rights upon Default. This lease may be terminated by Landlord without cause at any time upon ninety (90) days written notice to Tenant. Further, if proceedings are commenced against or by Tenant in any court under a Bankruptcy Act or for the appointment of a Trustee or Receiver of Tenant's property, or if there shall be a default in the payment of rent or any part thereof, or other payment due hereunder, for more than ten (10) days after written notice of such default is given by Landlord to Tenant, or if there shall be default in the performance of any other covenant, agreement or condition herein contained on the part of Tenant for more than thirty *(30)* days after written notice by Landlord, this Lease shall thereupon be terminated at Landlord's option, and Landlord shall have the right to re-enter or repossess the leased premises and dispossess and remove there from Tenant, or other occupants thereof and their effects, without being liable for any prosecution therefore. In such case, Landlord may, at its option, re-let the leased premises or any part thereof as the agent of Tenant, and Tenant shall pay the difference between the rent and other costs and charges herein reserved and agreed to be paid by Tenant for the portion of the term remaining at the time of re-entry or repossession and the amount, if any, received or to be received under such re-letting for such portion of the term. Should this Lease be placed in the hands of an attorney for default or breach, or for the enforcement of any rights herein reserved or stipulated, Tenant agrees to pay all costs incident thereto, including a reasonable attorney's fee.

12. Landlord's Right to Perform. If Tenant shall default in the performance of any covenant or condition of this Lease required to be performed by Tenant, Landlord may, at its option, perform such covenant or condition for the account and at the expense of Tenant. The amount of any expense so incurred shall be deemed additional rent and may, at the option of Landlord, be added to any subsequent installment of the net monthly rent due and payable under this Lease, in which event Landlord shall have the remedies for default in the payment thereof provided by this Lease. The provisions of this paragraph shall survive the termination of this Lease.

13. No Waiver. The failure of Landlord or Tenant to insist upon a strict performance of any term or condition of this Lease shall not be deemed a waiver of any right or remedy that Landlord or Tenant may have and shall not be deemed a waiver of any subsequent breach of such term or condition.

14. Landlord-Tenant Relationship. It is expressly agreed and understood that Landlord shall not be construed or held to be a partner or associate of Tenant in the conduct of its business, it being expressly understood and agreed that the sole relationship between the parties hereto is that of landlord and tenant.

15. Assignment. Tenant covenants not to assign this Lease or sublet the leased premises in whole or in part.

16. Notices. All notices and other communications to be given hereunder by either party shall be in writing and shall be delivered personally or mailed, postage prepaid, by first class mail to the other (and the date of any notice by certified or registered mail shall be deemed to be the date of certification or registration thereof) delivered or addressed to the parties as follows:

Landlord: Williamson County Board of Education
1320 West Main Street, Suite 202
Franklin, Tennessee 37064
Attn: Jason Golden, Superintendent of Schools

Tenant: Oak Hollow Church of Christ
2774 Oak Hollow Drive
Franklin, TN 37064
Attn: Jon Reames, Elder

or, at such other address as either party may later designate in writing.

17. Entire Agreement. The entire agreement between the parties hereto is contained in this instrument and it is expressly agreed that no obligations of Landlord or Tenant shall be implied in addition to those herein expressly contained. Any amendment to this Lease must be in writing signed by the parties hereto in order to be binding.

18. Binding Effect. The terms and provisions of this Lease shall be binding upon and inure to the benefit of the parties hereto and to their respective successors and assigns.

IN WITNESS WHEREOF, the parties hereto on the day and date first above written have executed this Lease at Franklin, Tennessee.

LANDLORD: Williamson County Board of Education

By: _____

Jason Golden, Director of Schools

TENANT: Oak Hollow Church of Christ

By: _____

Jon Reames, Elder

2025 - 2026 REQUEST FOR USE OF WILLIAMSON COUNTY SCHOOLS & FACILITIES BY COMMUNITY ORGANIZATIONS

Central Office Use
ID NUMBER _____

School to be Used: Page High

Purpose of Use: Sunday Church — Expected Attendance: 80 - 100

Organization Name: Oak Hollow Church of Christ

Request Made By: Jon Reames — Title in Organization: Elder

Street Address: 2774 Oak Hollow Drive — City: Franklin — Zip: 37064

Cell Number: 615-210 - 1020 — E-Mail: indianareames@hotmail.com

BUILDING USAGE **PLEASE FILL THIS FORM OUT IN ITS ENTIRETY**

Date & Days of Use: Sundays — S [X] M [ ] T [ ] W [ ] TH [ ] F [ ] ST [ ]

Reoccuring Use **Weekly** on: S [X] M [ ] T [ ] W [ ] TH [ ] F [ ] ST [ ]

Reoccuring Use **Monthly** on: 1st [ ] 2nd [ ] 3rd [ ] 4th [ ] 5th [ ] — S [ ] M [ ] T [ ] W [ ] TH [ ] F [ ] ST [ ]

Starting Date: November 23, 2025 — Ending Date: November 22,2026

Starting Time: 8:30 — X AM ___ PM — Ending Time: 11:30 — X AM ___ PM

FEE SCHEDULE - If applicable ***DO NOT LEAVE BLANK***

	Area(s) Needed		
[ ]	Classroom(s) Room #s _____ Limited classroom use per board policy	$16 per day per room	$
[ ]	Auditorium	$296 per day	$
	Stage Light ___ Y ___ N / Sound System ___ Y ___ N — One fee for either or both	$100 plus personnel fee	$
[ ]	Gymnasium	$302 per day	$
[ ]	Auxiliary Gym (High Schools Only)	$302 per day	$
[ ]	Gym for Jr. Sports Only - $19 per hour up to 8 hrs per day	(Max $302 per day)	$
[ ]	Stadium/Track/or other Game Field - *no charge for use		$ NA
[ ]	Tennis - *no charge for use		$ NA
[ ]	Campus (Outside Building) - *no charge for use		$ NA
[X]	Cafeteria (This is for the seating area only) - $19 per hour up to 8 hrs per day (Max $135 per day)		$ 135.00
	Kitchen (This is for the serving line area and main kitchen) (One WCS kitchen staff member must be present when the use of the kitchen is requested. They must be present for the entire time you request use of the kitchen. This cost will be determined by each school site.)		$
[ ]	*Supervision - Required*		
[ ]	Building Supervision *See Note 1*	$22.62 per hour (incl tax)	$
[ ]	Name of Supervisor: Jared Street [X] Check if supervisor is waiving fees.		
[X]	Custodial Services	**Check here if needed**	X
	***Custodial service based on actual time for ‹for cleaning as needed and determined by contractor**		$
		TOTAL ESTIMATED FEE	$

Note 1: There is no charge for use of outdoor fields, tennis courts or campus per WCS board.
2. When multiple rooms are used, supervision is calculated on one room. Supervision for outside as requited

MAKE PAYMENT TO: WILLIAMSON COUNTY SCHOOLS, 1320 West Main Street, Suite 202, Franklin, TN 37064
No funds shall be paid individually to any employee or individual school for use of facilities.
Hold Harmless Clause on page 2 must be completed. See page 2 for policy and procedures.

REQUEST FOR USE OF WILLIAMSON COUNTY SCHOOLS & FACILITIES

All organizations requesting use of Williamson County School Facilities shall ATTACH a Certificate of Insurance with the Request for Facilities Use form. The Policy must name Williamson County Board of Education as additionally insured for no less than ONE MILLION DOLLARS ($1,000,000.00) for the duration of the organization's use of the facility. PLEASE MARK "PUBLIC SCHOOL USE" ON THE CERTIFICATE along with "No Participant is Excluded".

AGREEMENT

I/We agree to be responsible for the conduct of the audience in and about the building and for any damage incurred. I/We have reviewed the policy rules and regulations of the WCS Board of Education, and further agree that the school property will be used in accordance with the rules and regulations of the Williamson County Board of Education. I/We understand that no contract shall extend beyond June 30th of the current fiscal year.

I/We agree to indemnify and hold harmless the WILLIAMSON COUNTY BOARD OF EDUCATION from:

(A) Any claims, damages, costs and attorney fees for injuries or damages arising, in part or in whole from the organization's use of the facility described above; and,

(B) Any claims, damages, penalties, costs and attorney fees arising from any failure of the organization, its officers, employees and/or agents, to observe applicable laws.

I/We further acknowledge that the Williamson County Government does not warrant that the facility requested is being currently maintained and will not be responsible for inspection and maintenance of the facility while it is being used by the requesting organization.

I/We acknowledge that all estimated fees for use of Williamson County School Facilities shall be paid in advance of use.

I/We understand that building supervision, custodial services, cafeteria worker and cafeteria manager fee will be charged as needed for building supervision, clean up, and use of kitchen facilities. I/We agree to pay the amount(s) billed after use of the facility. *Please do not alter the verbiage on this form in any way*

Authorized Signature 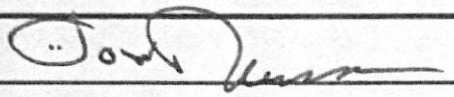	Date 10/23/2025
Name: (PRINT ONLY) Jon Reames	

THIS IS NOT A FINAL INVOICE

This is not a final invoice – only an estimate. Your invoice will be calculated upon approval of the requested use and a final invoice will be sent at that time.

FORWARD COMPLETED REQUEST TO: SCHOOL PRINCIPAL

QUESTIONS?

Facilities & Construction Department - Lenny Ramirez
615-472-4043

Upon acceptance by the WCS Facilities & Construction Department, an approved copy of this Request will be returned to School Administration.

PRINCIPAL SIGNATURE - Facility is available during time and dates requested:

Randel D. Hatley

This does not constitute final approval which resides with Facilities Dept/Central Office

Central Office - Event falls within policy guidelines and insurance sufficient for use ☐ ☐

Date

*Revsd 6/1/2025 (for 2025-2026 school year) * In the event of an emergency, call 9-1-1, start CPR and retrieve and use the nearest AED**

CERTIFICATE OF LIABILITY INSURANCE

DATE (MM/DD/YYYY): 10/10/2025

THIS CERTIFICATE IS ISSUED AS A MATTER OF INFORMATION ONLY AND CONFERS NO RIGHTS UPON THE CERTIFICATE HOLDER. THIS CERTIFICATE DOES NOT AFFIRMATIVELY OR NEGATIVELY AMEND, EXTEND OR ALTER THE COVERAGE AFFORDED BY THE POLICIES BELOW. THIS CERTIFICATE OF INSURANCE DOES NOT CONSTITUTE A CONTRACT BETWEEN THE ISSUING INSURER(S), AUTHORIZED REPRESENTATIVE OR PRODUCER, AND THE CERTIFICATE HOLDER.

IMPORTANT: If the certificate holder is an ADDITIONAL INSURED, the policy(ies) must have ADDITIONAL INSURED provisions or be endorsed. If SUBROGATION IS WAIVED, subject to the terms and conditions of the policy, certain policies may require an endorsement. A statement on this certificate does not confer rights to the certificate holder in lieu of such endorsement(s).

PRODUCER

Adelie Risk Advisors, LLC
6555 Longshore Street
Suite 200
Dublin OH 43017

CONTACT NAME: Pamela Mondaine
PHONE (A/C, No, Ext): **FAX (A/C, No):**
E-MAIL ADDRESS: pamela.mondaine@adelieriskadvisors.com

INSURER(S) AFFORDING COVERAGE	NAIC #
INSURER A : MOUNT VERNON FIRE INS CO	26522
INSURER B :	
INSURER C :	
INSURER D :	
INSURER E :	
INSURER F :	

INSURED

OAK HOLLOW CHURCH OF CHRIST
2774 OWL HOLLOW DRIVE
FRANKLIN TN 37064

COVERAGES **CERTIFICATE NUMBER:** **REVISION NUMBER:**

THIS IS TO CERTIFY THAT THE POLICIES OF INSURANCE LISTED BELOW HAVE BEEN ISSUED TO THE INSURED NAMED ABOVE FOR THE POLICY PERIOD INDICATED. NOTWITHSTANDING ANY REQUIREMENT, TERM OR CONDITION OF ANY CONTRACT OR OTHER DOCUMENT WITH RESPECT TO WHICH THIS CERTIFICATE MAY BE ISSUED OR MAY PERTAIN, THE INSURANCE AFFORDED BY THE POLICIES DESCRIBED HEREIN IS SUBJECT TO ALL THE TERMS, EXCLUSIONS AND CONDITIONS OF SUCH POLICIES. LIMITS SHOWN MAY HAVE BEEN REDUCED BY PAID CLAIMS.

INSR LTR	TYPE OF INSURANCE	ADDL INSD	SUBR WVD	POLICY NUMBER	POLICY EFF (MM/DD/YYYY)	POLICY EXP (MM/DD/YYYY)	LIMITS	
A	[X] COMMERCIAL GENERAL LIABILITY [ ] CLAIMS-MADE [X] OCCUR GEN'L AGGREGATE LIMIT APPLIES PER: [ ] POLICY [ ] PRO-JECT [ ] LOC [ ] OTHER:	Y		NPP2600074	10/7/2025	10/7/2026	EACH OCCURRENCE DAMAGE TO RENTED PREMISES (Ea occurrence) MED EXP (Any one person) PERSONAL & ADV INJURY GENERAL AGGREGATE PRODUCTS - COMP/OP AGG	$ 1,000,000 $ 100,000 $ 5,000 $ 1,000,000 $ 2,000,000 $ 2,000,000
	AUTOMOBILE LIABILITY [ ] ANY AUTO [ ] OWNED AUTOS ONLY [ ] SCHEDULED AUTOS [ ] HIRED AUTOS ONLY [ ] NON-OWNED AUTOS ONLY						COMBINED SINGLE LIMIT (Ea accident) BODILY INJURY (Per person) BODILY INJURY (Per accident) PROPERTY DAMAGE (Per accident)	$ $ $ $
	[ ] UMBRELLA LIAB [ ] OCCUR [ ] EXCESS LIAB [ ] CLAIMS-MADE [ ] DED [ ] RETENTION $						EACH OCCURRENCE AGGREGATE	$ $
	WORKERS COMPENSATION AND EMPLOYERS' LIABILITY ANYPROPRIETOR/PARTNER/EXECUTIVE OFFICER/MEMBER EXCLUDED? Y / N [ ] (Mandatory in NH) If yes, describe under DESCRIPTION OF OPERATIONS below	N / A					[ ] PER STATUTE [ ] OTH-ER E.L. EACH ACCIDENT E.L. DISEASE - EA EMPLOYEE E.L. DISEASE - POLICY LIMIT	 $ $ $

DESCRIPTION OF OPERATIONS / LOCATIONS / VEHICLES (ACORD 101, Additional Remarks Schedule, may be attached if more space is required)

Williamson County Board of Education is listed as an additional insured on the General Liability policy per the written contract.

CERTIFICATE HOLDER

Williamson County Board of Education
1320 W Main
Franklin TN 37064

CANCELLATION

SHOULD ANY OF THE ABOVE DESCRIBED POLICIES BE CANCELLED BEFORE THE EXPIRATION DATE THEREOF, NOTICE WILL BE DELIVERED IN ACCORDANCE WITH THE POLICY PROVISIONS.

AUTHORIZED REPRESENTATIVE

Pamela Mondaine

© 1988-2015 ACORD CORPORATION. All rights reserved.

Facilities & Construction
1320 West Main Street, Suite 202
Franklin, Tennessee 37064
(615) 472-4040

MEMORANDUM

November 5, 2025

TO: **Williamson County Board of Education**

CC: **Jason Golden, Superintendent of School**
Brian King, Assistant Superintendent of Operations

FROM: **Eric J. Gardner, P.E., Director of Facilities & Construction**

RE: **Heritage Middle School Storage Building Request**

Heritage Middle School is requesting permission to construct a 24'x30' metal storage building near the football field. The building would serve as storage for turf equipment as well as a workspace for repairing equipment.

The project is fully funded by the Heritage Middle School PTO, Student Council, and Athletics. The following conditions apply to obtaining approval.

- The project must be submitted and approved by the Town of Thompson's Station.
- The contractor will submit a Certificate of Insurance naming WCS as additional insured and all employees working on WCS property will have passed a background check.
- Construction cannot begin until a Town of Thompson's Station building permit has been issued.

Staff recommends approval.


4799
Storage
Building Here
24x30

Legend



GENERAL NOTES:

A. **GOVERNING CODES**
1. INTERNATIONAL BUILDING CODE (IBC 2018)
2. ASCE 7-16
3. NATIONAL DESIGN SPECIFICATION FOR WOOD CONSTRUCTION (NDS)
4. POST FRAME DESIGN MANUAL 2ND EDITION

B. **CONTRACTOR RESPONSIBILITY**
1. ALL STRUCTURES SHALL BE CONSTRUCTED ACCORDING TO DIMENSIONS NOTED WITHIN THESE CONSTRUCTION DOCUMENTS.
2. SCALING OF DIMENSIONS SHALL NOT BE PERMITTED.
3. THE GENERAL CONTRACTOR SHALL VERIFY ALL DIMENSIONS (INCLUDING ROUGH OPENINGS) AND ALL CONDITIONS ON THE SUBJECT SITE.
4. NEITHER STM ENGINEERING, LLC NOR ITS REPRESENTATIVES SHALL BE RESPONSIBLE FOR CONSTRUCTION MEANS AND METHODS, ACTS OR OMISSIONS OF THE CONTRACTOR OR THEIR SUBCONTRACTORS OR FAILURE TO PERFORM CONSTRUCTION ACTIVITIES IN ACCORDANCE WITH THESE CONSTRUCTION DOCUMENTS.
5. ANY DISCREPANCY OR OMISSION DISCOVERED IN THESE CONSTRUCTION DOCUMENTS SHALL BE BROUGHT TO THE ATTENTION OF THE ENGINEER OF RECORD BY WRITTEN NOTICE BEFORE THE COMMENCEMENT OF ANY CONSTRUCTION ACTIVITIES.
6. STM ENGINEERING, LLC SHALL REQUIRE A MINIMUM OF TWO (2) WEEKS TO CORRECT ANY OMISSIONS OR ERRORS DISCOVERED WITHIN THESE CONSTRUCTION DOCUMENTS.
7. IF THE MINIMUM TIME REQUIRED TO CORRECT ANY OMISSION OR ERROR IN THESE CONSTRUCTION DOCUMENTS IS NOT GRANTED TO STM ENGINEERING, LLC, THE GENERAL CONTRACTOR SHALL ASSUME ALL COST AND LIABILITY TO CORRECT THE IDENTIFIED ERROR OR OMISSION.
8. ALL STRUCTURES SHALL BE ADEQUATELY BRACED WITH THE NECESSARY TEMPORARY BRACING ELEMENTS FOR ALL LATERAL AND CONSTRUCTION LOADING UNTIL ALL PERMANENT LATERAL FORCE RESISTING SYSTEM ELEMENTS HAVE BEEN FULLY INSTALLED.
9. THE GENERAL CONTRACTOR SHALL BE SOLELY RESPONSIBLE FOR ALL NECESSARY TEMPORARY BRACING ELEMENTS.
10. THE GENERAL CONTRACTOR AND/OR OWNER SHALL MAINTAIN AN UP-TO-DATE SET OF CONSTRUCTION DRAWINGS ON THE JOB SITE AT ALL TIMES. THE GENERAL CONTRACTOR AND/OR OWNER SHALL OBTAIN ALL PROPER BUILDING PERMITS AND ENSURE ALL REQUIRED INSPECTIONS ARE MADE.
11. ANY ROOF AND/OR WALL PENETRATION SHALL BE MADE WEATHERPROOF WITH THE NECESSARY FLASHING AND/OR CAULKING AS REQUIRED.
12. IT SHALL BE THE SOLE RESPONSIBILITY OF THE GENERAL CONTRACTOR AND/OR OWNER TO PROPERLY RECEIVE AND STORE ALL BUILDING MATERIALS WITHOUT DAMAGE.
13. THE GENERAL CONTRACTOR SHALL ERECT ALL POST-FRAME STRUCTURES IN ACCORDANCE WITH THE FOLLOWING DOCUMENTS:
    a. BCSI-B10 (WOOD TRUSS COUNCIL OF AMERICA & TRUSS PLATE INSTITUTE)
    b. ACCEPTED PRACTICE FOR POST-FRAME BUILDING CONSTRUCTION: FRAMING TOLERANCES (NATIONAL FRAME BUILDERS ASSOCIATION)

C. **STRUCTURAL LOAD CRITERIA**
1. RISK CATEGORY: **II** (ASCE 7-16 TABLE 1.5-1)
2. DEAD LOAD
   - THE DESIGN DEAD LOAD OF THE STRUCTURE SHALL INCLUDE THE SELF-WEIGHT OF ALL PERMANENT BUILDING ELEMENTS AS DETERMINED BY THE ENGINEER OF RECORD.
3. ROOF LIVE LOAD: **20 PSF** (ASCE 7-16 TABLE 4.3-1)
4. SNOW LOAD (ASCE 7-16 CHAPTER 7)
   - GROUND SNOW LOAD (p_g): **10 PSF**
   - MINIMUM SNOW LOAD (p_m): **10 PSF**
   - SNOW IMPORTANCE FACTOR (I_s): **1.0**
   - EXPOSURE FACTOR (C_e): **0.9**
   - THERMAL FACTOR (C_t): **1.2**
   - FLAT ROOF SNOW LOAD (p_f): **6 PSF**
5. WIND LOAD (ASCE 7-16 CHAPTER 26)
   - BASIC WIND SPEED (V): **105 MPH**
   - WIND DIRECTIONALITY FACTOR (K_d): **0.85**
   - TOPOGRAPHIC FACTOR (K_{zt}): **1.0**
   - GROUND ELEVATION FACTOR (K_e): **1.0**
   - EXPOSURE CATEGORY: **C**
   - ENCLOSURE CLASSIFICATION: **ENCLOSED**
   - INTERNAL PRESSURE COEFFICIENT (GC_{pi}): **±0.18**
   - GUST-EFFECT FACTOR (G): **0.85**
6. SEISMIC LOAD (ASCE 7-16 CHAPTER 11)
   - SEISMIC IMPORTANCE FACTOR (I_e): **1.0**
   - SITE CLASS: **D**
   - SEISMIC DESIGN CATEGORY: **D**
   - SHORT-PERIOD SITE COEFFICIENT (F_a): **1.567**
   - LONG-PERIOD SITE COEFFICIENT (F_v): **2.314**
   - S_{ds}: **0.291**
   - S_{d1}: **0.143**
   - S_{ms}: **0.456**
   - S_{m1}: **0.331**
   - S_{ds}: **0.304**
   - S_{D1}: **0.221**
   - T_L: **12 SEC**
   - T: **0.145 SEC**
   - RESPONSE MODIFICATION FACTOR (R): **1 1/2**
   - SEISMIC RESPONSE COEFFICIENT (C_s): **0.11**
   - SEISMIC WEIGHT (W): **12,240 LBF**
   - SEISMIC BASE SHEAR (V): **2,490 LBF**

SUMMERTOWN METALS

3864 Summertown Highway
Summertown, TN 38483
Phone: (931) 796-1521
Email: info@summertownmetals.com

Drawings Prepared For:

Heritage Middle School

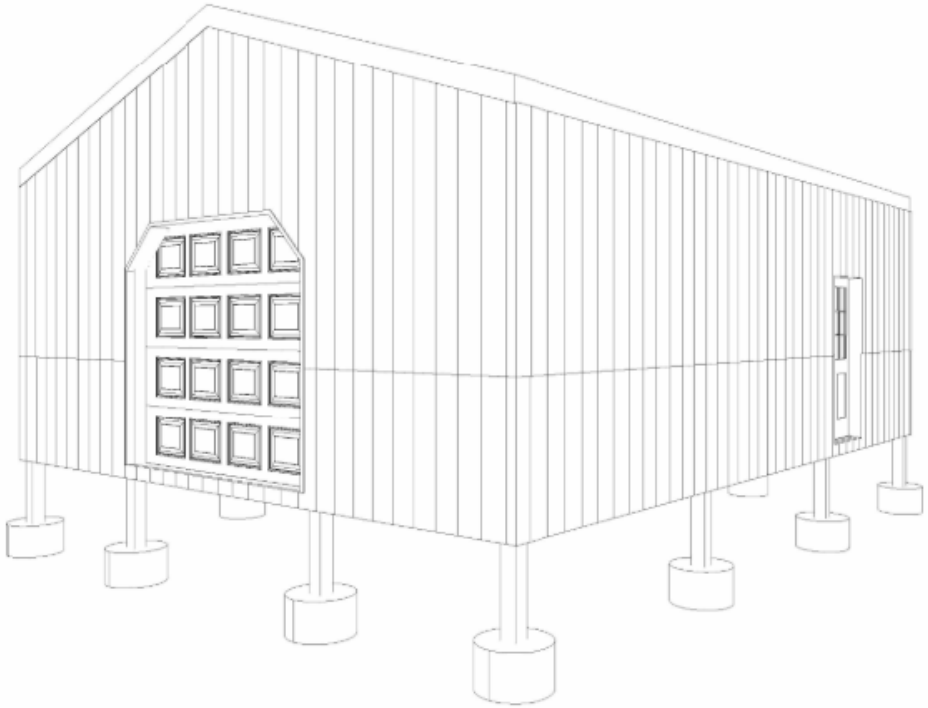

Abbreviations

&:	and	EXT:	exterior	PT:	pressure-treated lumber
@:	at	FND:	foundation	SP:	southern pine
ø:	diameter	FTG.:	footing	SPF:	spruce-pine fir
BTM.:	bottom	INT.:	interior	SQ:	square
B/W:	between	LSH:	long side horizontal	TYP.:	typical
CLR:	clear	LSV:	long side vertical	U.N.O.:	unless noted otherwise
CL:	centerline	LVL:	laminated veneer lumber	W/:	with
CONC:	concrete	MAX:	maximum	W/O:	without
DBL:	double	MIN:	minimum		
E.W.:	each way	O.C.:	on center		

GENERAL NOTES CONT'D:

D. **WOOD STRUCTURE REQUIREMENTS**
1. UNLESS SPECIFICALLY NOTED ON THE DRAWINGS, NO ONE SHALL CUT, NOTCH OR DRILL ANY TRUSS, HEADER, BEAM, POST, GIRT, PURLIN, OR FLANGE OF I-JOIST.
2. ANY MEMBER REPAIRS OR REPLACEMENT SHALL BE AS SPECIFIED IN WRITING BY A LICENSED PROFESSIONAL ENGINEER AND THE EXPENSE OF THE REPAIR SHALL BE THE RESPONSIBILITY OF THE PARTY WHICH CREATED THE DAMAGE.
3. DIMENSIONED LUMBER MEMBERS SHALL BE DESIGNED IN ACCORDANCE WITH THE LATEST EDITION OF THE NATIONAL DESIGN SPECIFICATION FOR WOOD CONSTRUCTION AND ALL RELATED DOCUMENTS.
4. ALL MEMBERS SHALL BE THE SIZE, GRADE AND SPECIES AS INDICATED WITHIN THESE DRAWINGS.
5. SAWN LUMBER USED FOR LOAD-SUPPORTING PURPOSES, INCLUDING END-JOINTED OR EDGE-GLUED LUMBER, MACHINE STRESS-RATED OR MACHINE-EVALUATED LUMBER, SHALL BE IDENTIFIED BY THE GRADE MARK OF A LUMBER GRADING OR INSPECTION AGENCY THAT HAS BEEN APPROVED BY AN ACCREDITATION BODY THAT COMPLIES WITH DOC PS 20 OR EQUIVALENT.
6. PRESSURE PRESERVATIVE TREATED LUMBER SHALL BE TREATED WITH WATERBORNE PRESERVATIVE AND BEAR THE QUALITY MARK OF AN APPROVED INSPECTION AGENCY. POSTS AND SKIRTS SHALL BE PROTECTED WITH PRESSURE PRESERVATIVE CHEMICAL TREATMENTS TO RETENTION LEVELS FOR USE CATEGORY UC4B OR BETTER PER AWPA-U1.

E. **STRUCTURAL CONCRETE REQUIREMENTS**
1. MINIMUM 28-DAY COMPRESSIVE STRENGTH SHALL BE EQUAL OR EXCEED THE FOLLOWING CRITERIA:
   a. PADS AND UNREINFORCED FOOTINGS: **4000 PSI**
   b. REINFORCED PADS AND FOOTINGS: **4000 PSI**
   c. SLABS ON GRADE: **4000 PSI**
2. UNLESS PLASTICIZERS ARE USED, WORKABLE SLUMP SHALL BE NO LESS THAN 4".
3. NO EXCESS WATER SHALL BE ADDED ON-SITE.
4. ALL CONCRETE EXPOSED TO WEATHER SHALL HAVE MINIMUM 5% AND MAXIMUM 7% ENTRAINED AIR.
5. ALL REINFORCEMENT STEEL SHALL CONFORM TO THE REQUIREMENTS OF ASTM A615 AND SHALL BE DEFORMED BARS WITH AN ULTIMATE YIELD STRESS OF 60,000 PSI.
6. ALL LAP SPLICES SHALL BE CONFORM TO THE REQUIREMENTS OF ACI 318-14 CLASS 'B'.
7. EXCEPT FOR BUILDINGS WHERE MIGRATION OF MOISTURE THROUGH THE SLAB WILL NOT BE DETRIMENTAL OR FOR SITES THAT ARE ESPECIALLY DRY, A 6 MIL POLYETHYLENE VAPOR RETARDER WITH JOINTS LAPPED 6" MINIMUM SHALL BE PLACED BETWEEN THE BASE COURSE OR SUB GRADE AND THE CONCRETE. FOR SITES THAT ARE ESPECIALLY WET, PERIMETER DRAINS SHALL BE INSTALLED AS REQUIRED IN ADDITION TO THE VAPOR RETARDER.
8. FORMS SHALL BE CLEANED AND LUBRICATED PRIOR TO INSTALLATION OF CONCRETE. ALL MEMBERS USED TO FORM THE PERIMETER OF CONCRETE SHALL BE BRACED BY THE CONTRACTOR TO REMAIN IN-PLACE DURING CONCRETE INSTALLATION. ALL UNTREATED FORM BOARDS SHALL BE REMOVED ONCE CONCRETE HAS CURED.
9. CONCRETE SHALL BE CONSOLIDATED BY ACCEPTED VIBRATORY CONSOLIDATION METHODS. CONTRACTOR SHALL ENSURE THAT FRESH CONCRETE OCCUPIES ALL SPACES BETWEEN ANY REINFORCEMENT, IF ANY.
10. NO CONCRETE IS PERMITTED TO BE INSTALLED WHEN OUTSIDE AIR TEMPERATURE IS BELOW 40° F.
11. FOR BUILDINGS WITHOUT A FLOOR SLAB, IT IS RECOMMENDED THAT A VAPOR RETARDER BE INSTALLED IN ACCORDANCE WITH NOTE 7.

Project Location Map



Current Revision

Number	Date	Issued For	Description
0	9/22/2025	CBP	PERMIT SUBMITTAL

Cover Sheet & General Notes

Project No.: 146121

Project Status: FOR CONSTRUCTION

Heritage Middle School

Project Address: 4803 Columbia Pike, Thompson's Station, TN. 37179

SUMMERTOWN METALS
3864 Summertown Hwy.
Summertown, TN 38483
Phone: (931) 796-1521
www.summertownmetals.com

Date Issued: 9/22/2025

Scale: NOT TO SCALE

Drawn By: CBP | Checked By: CBP

KEITH CAMERON COLLINS — STATE OF TENNESSEE — 9/22/2025

COA FIRM #: 2139

Sheet: S.1

THESE PLANS ARE THE SOLE PROPERTY OF SUMMERTOWN METALS, LLC. ANY UNAUTHORIZED REPRODUCTION OF THESE PLANS IS STRICTLY PROHIBITED.

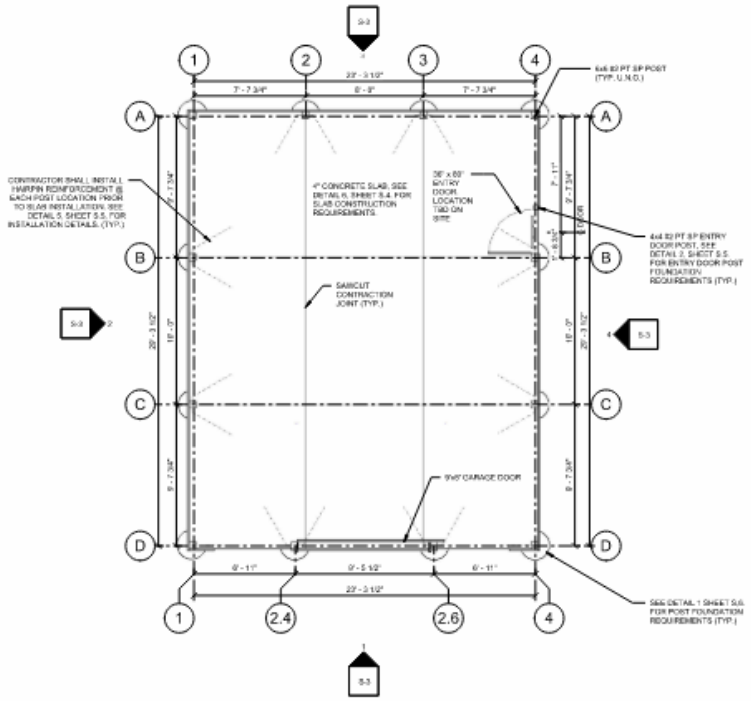

1 Post Placement Plan
1/4" = 1'-0"

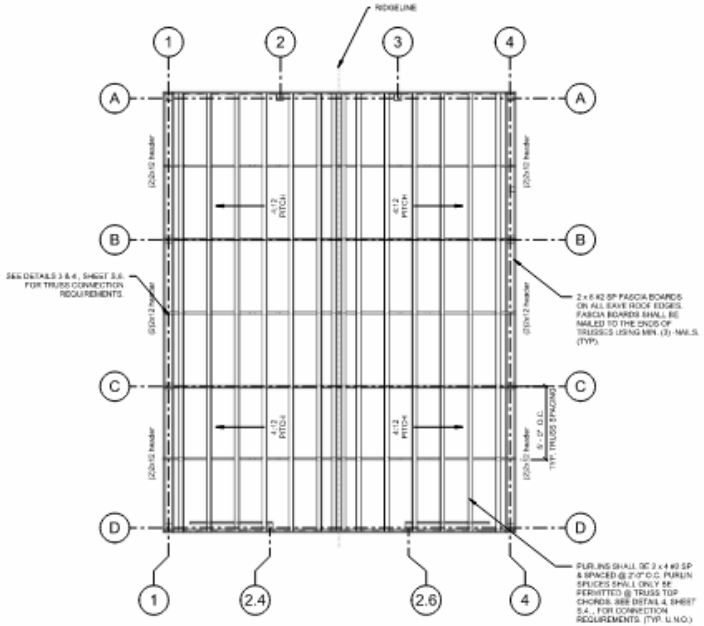

2 Roof Framing Plan
1/4" = 1'-0"

NOTES:

1. DIMENSIONS ARE TO CENTERLINE OF POSTS (TYP. U.N.O.)
2. SEE STRUCTURAL ELEVATIONS ON SHEET S.4, FOR FRAMING REQUIREMENTS.
3. SEE DETAIL 1, SHEET S.5, FOR MAIN BUILDING POST FOUNDATION REQUIREMENTS.
4. SEE DETAIL 2, SHEET S.5, FOR ENTRY DOOR POST FOUNDATION REQUIREMENTS.
5. ALL HAIRPIN REINFORCEMENT SHALL BE INSTALLED PRIOR TO INSTALLATION OF CONCRETE SLAB.
6. CONTRACTOR SHALL SAWCUT CONTRACTION JOINTS (1) DAY AFTER SLAB HAS BEEN POURED. CONTRACTION JOINTS SHALL BE CUT TO A MIN. DEPTH OF 1" & SHALL BE SPACED @ MAX. 10'-0" E.W. (TYP.)
7. THE STRUCTURE DETAILED WITHIN THIS PLAN SET IS ASSIGNED TO OCCUPANCY CATEGORY 'U' IN ACCORDANCE WITH ISO 2018 SECTION 312. THIS STRUCTURE IS NOT DESIGNED FOR RESIDENTIAL USE.

FRAMING NOTES:

1. ALL NAILS SHALL BE 10d POST-FRAME RING SHANK NAILS W/ MIN. SHANK LENGTH OF 3" & MIN. SHANK @ OF 0.148". (TYP. U.N.O.)
2. PURLIN SPLICES SHALL ONLY BE PERMITTED @ TRUSS CHORD LOCATIONS.
3. TRUSS DESIGN SHALL BE THE SOLE RESPONSIBILITY OF THE MANUFACTURER & TRUSS DESIGNER. THE ENGINEER OF RECORD DESIGNATED ON THESE PLANS SHALL NOT BE HELD LIABLE FOR ANY DEFECTS, FAILURES, OR INCOMPATIBILITY OF ANY ROOF TRUSS. TRUSS DESIGN IS NOT PART OF THIS DRAWING PACKAGE.
4. HEADERS SHALL BE CONSTRUCTED OF SYP #1 LUMBER, OR BETTER, AND SOLID BLOCKED AT TRUSS BEARING LOCATIONS.

THESE PLANS ARE THE SOLE PROPERTY OF SUMMERTOWN METALS, LLC. ANY UNAUTHORIZED REPRODUCTION OF THESE PLANS IS STRICTLY PROHIBITED.

Current Revision

Number	Date	Revision Table	Description
0	09/22/25	Issued By: CC	ISSUE FOR CONSTRUCTION

Description: Structural Plans

Project No.: 146121

Project Status: FOR CONSTRUCTION

Prepared For: Heritage Middle School

Project Address: 4803 Columbia Pike Thompson's Station, TN. 37179

SUMMERTOWN METALS
3864 Summertown Hwy.
Summertown, TN 38483
Phone: (931) 796-1521
www.summertownmetals.com

Date Issued: 9/22/2025

Scale: 1/4" = 1'-0"

Drawn By: CBP

Checked By: CBP

CURTIS CAMERON COPPER
STATE OF TENNESSEE
9/22/25

COA FIRM # 3739

Sheet: S.2

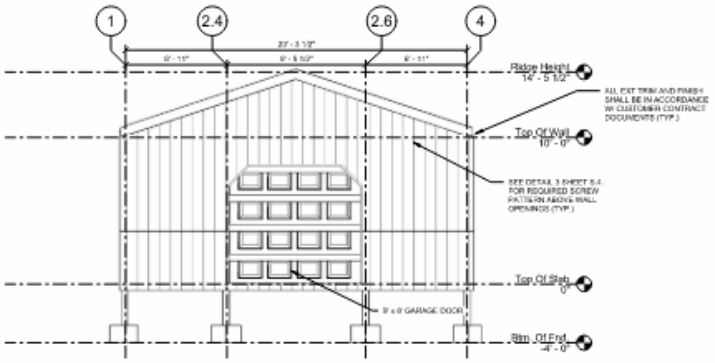

1 Gable 1 Ext. Elevation
1/4" = 1'-0"

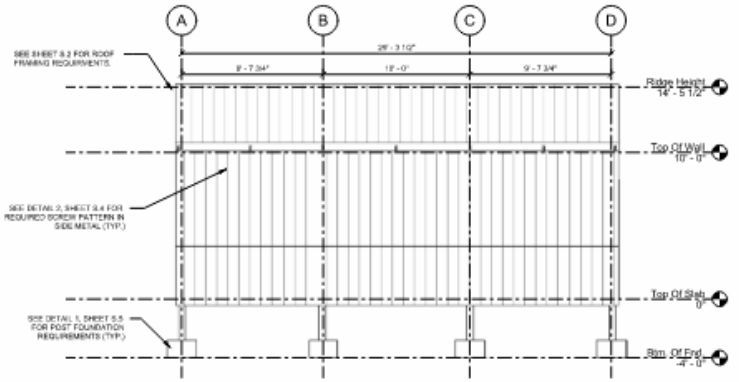

2 Side 1 Ext. Elevation
1/4" = 1'-0"

NOTES:

1. ALL SURFACES SHALL BE CLAD W/ 29 GA. CORRUGATED METAL SIDING W/ MIN. THICKNESS OF 0.0167" & MAX. RIB SPACING OF 8". (TYP. U.N.O.)
2. ALL METAL PANELS SHALL BE INSTALLED IN ACCORDANCE W/ DETAILS 1, 2, & 3 ON SHEET S.8.
3. REFER TO STRUCTURAL FRAMING ELEVATIONS ON SHEET S.3. FOR ALL FRAMING REQUIREMENTS.
4. REFER TO STRUCTURAL DETAILS ON SHEET S.4 & S.5. FOR FOUNDATION REQUIREMENTS.
5. ALL FASCIA, SOFFITS & EXTERIOR TRIM SHALL BE INSTALLED ACCORDING TO CUSTOMER CONTRACT DOCUMENTS.
6. WHEN USING METAL BUILDING APPURTENANCES TO ATTACH SOFFIT TO WALL, CONTRACTOR SHALL ENSURE THAT METAL WALL PANELS RECEIVE THE REQUIRED SCREW PATTERN AS DESIGNATED WITHIN THIS PLAN SET.

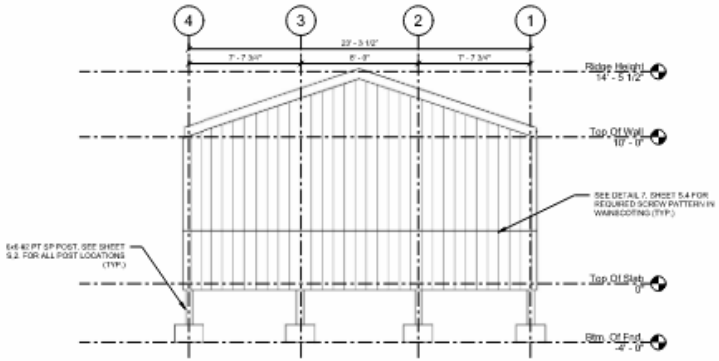

3 Gable 2 Ext. Elevation
1/4" = 1'-0"

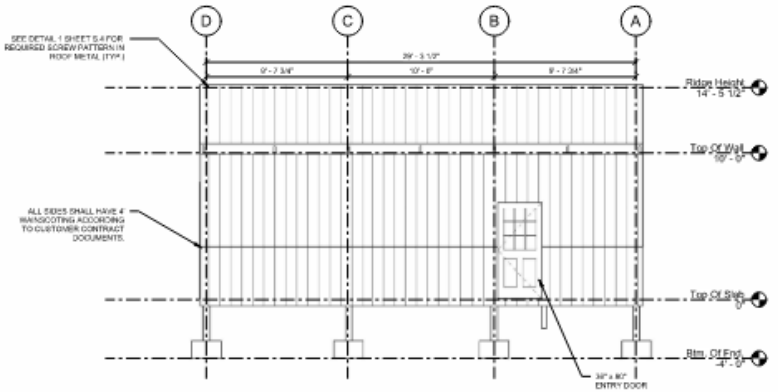

4 Side 2 Ext. Elevation
1/4" = 1'-0"

THESE PLANS ARE THE SOLE PROPERTY OF SUMMERTOWN METALS, LLC. ANY UNAUTHORIZED REPRODUCTION OF THESE PLANS IS STRICTLY PROHIBITED.

Current Revision

Revision Table			
Number	Date	Issued By	Description
0	09/22/25	CC	ISSUE FOR CONSTRUCTION

Description: Exterior Elevations

Project No.: 146121

Project Status: FOR CONSTRUCTION

Prepared For: Heritage Middle School

Project Address: 4803 Columbia Pike Thompson's Station, TN. 37179

SUMMERTOWN METALS
3864 Summertown Hwy.
Summertown, TN 38483
Phone: (931) 796-1521
www.summertownmetals.com

Date Issued: 9/22/2025

Scale: 1/4" = 1'-0"

Drawn By: CBP

Checked By: CBP

COA FIRM # 2739

Sheet: S.3

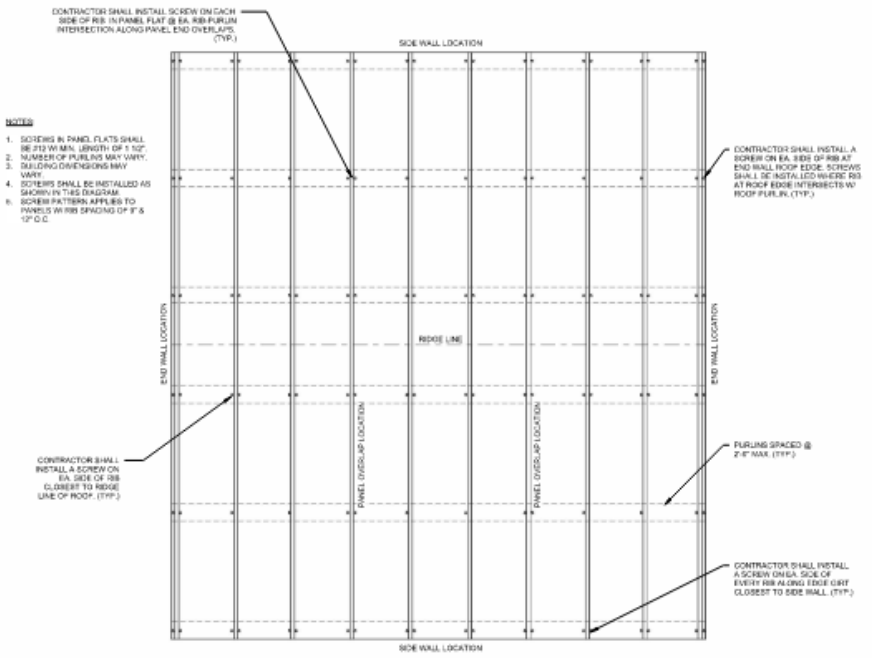

1 Roof Metal Connection Detail
1" = 1'-0"

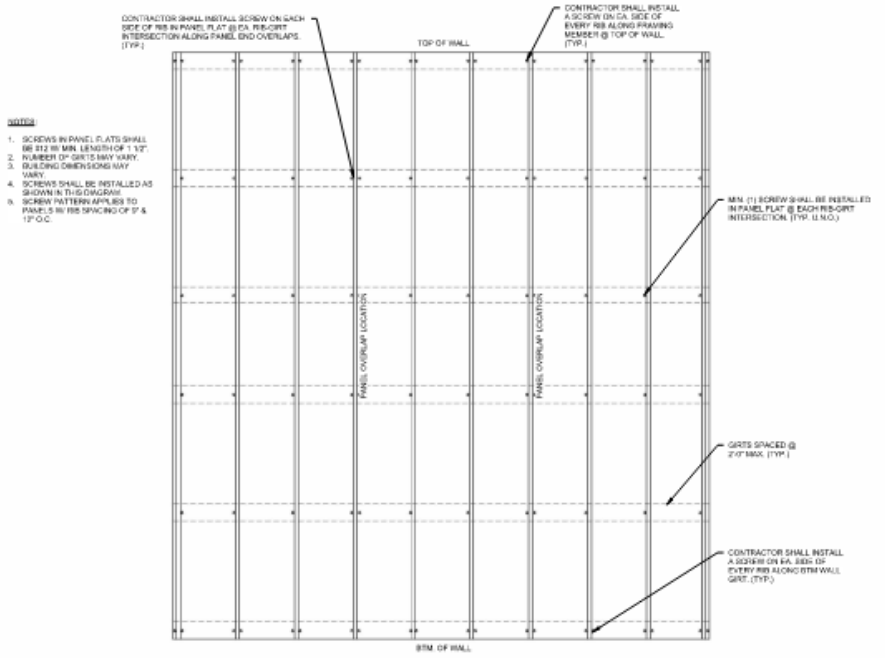

2 Wall Metal Connection Detail
1" = 1'-0"

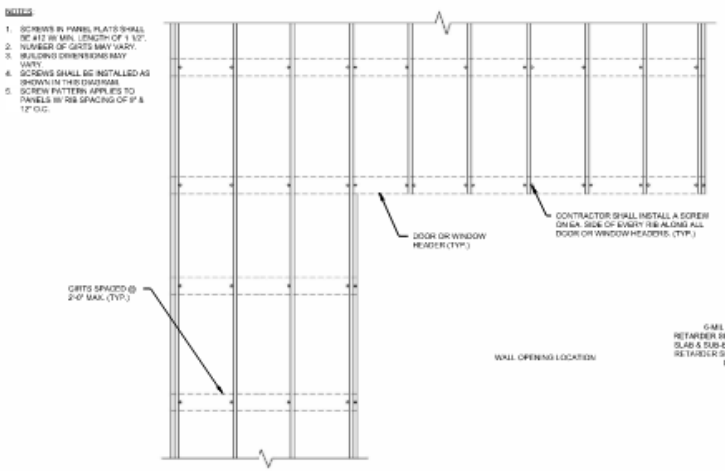

3 Metal Connection at Wall Opening Detail
1" = 1'-0"

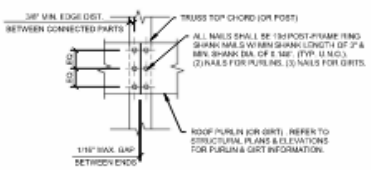

4 Typ. Purlin & Girt Splice Detail
3" = 1'-0"

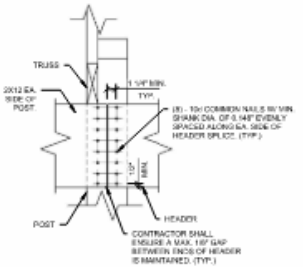

5 Typ. Header Splice at Post Detail
1 1/2" = 1'-0"

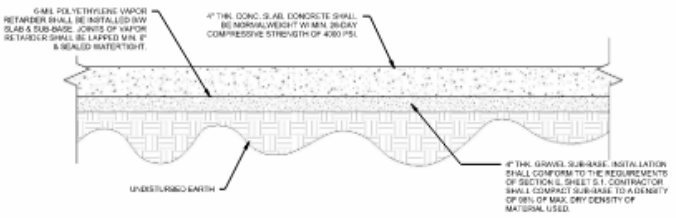

6 Typ. Slab Installation Detail
1 1/2" = 1'-0"

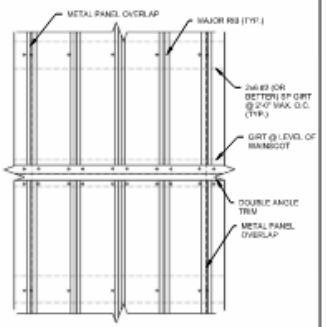

7 Typ. Wainscot Screw Detail
1" = 1'-0"

Current Revision

Number	Date	Description
0	09/22/25	Issued for Construction

Structural Details

Project No.
1461121

Project Status
FOR CONSTRUCTION

Heritage Middle School

4803 Columbia Pike
Thompson's Station, TN. 37179

SUMMERTOWN METALS
3864 Summertown Hwy.
Summertown, TN. 38483
Phone: (931) 796-1521
www.summertownmetals.com

Date Issued
9/22/2025

Scale
As indicated

Drawn By
CBP

Checked By
CBP

CDR FIRM #: 3139

Sheet
S.4

THESE PLANS ARE THE SOLE PROPERTY OF SUMMERTOWN METALS, LLC. ANY UNAUTHORIZED REPRODUCTION OF THESE PLANS IS STRICTLY PROHIBITED.

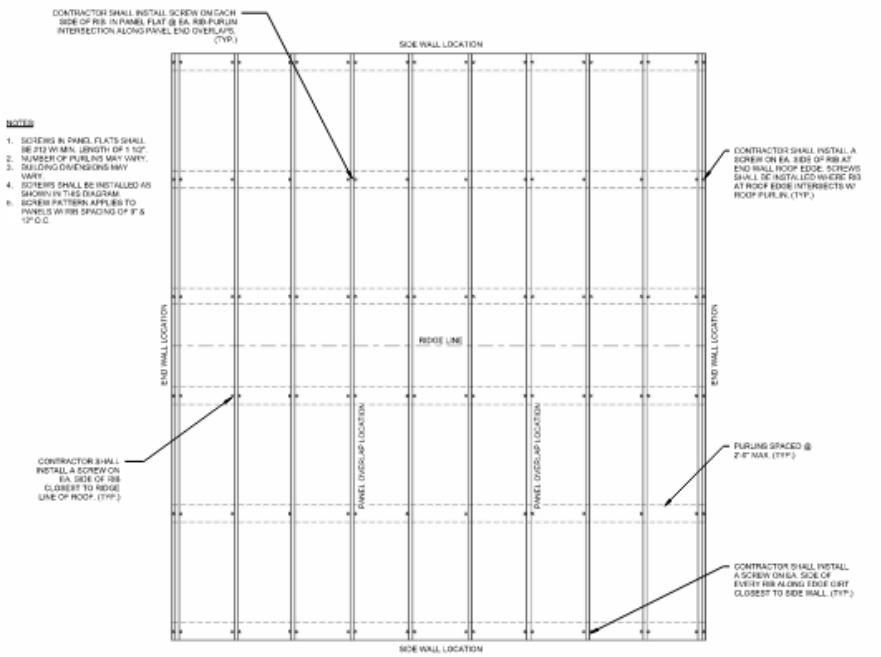

1 Roof Metal Connection Detail
1" = 1'-0"

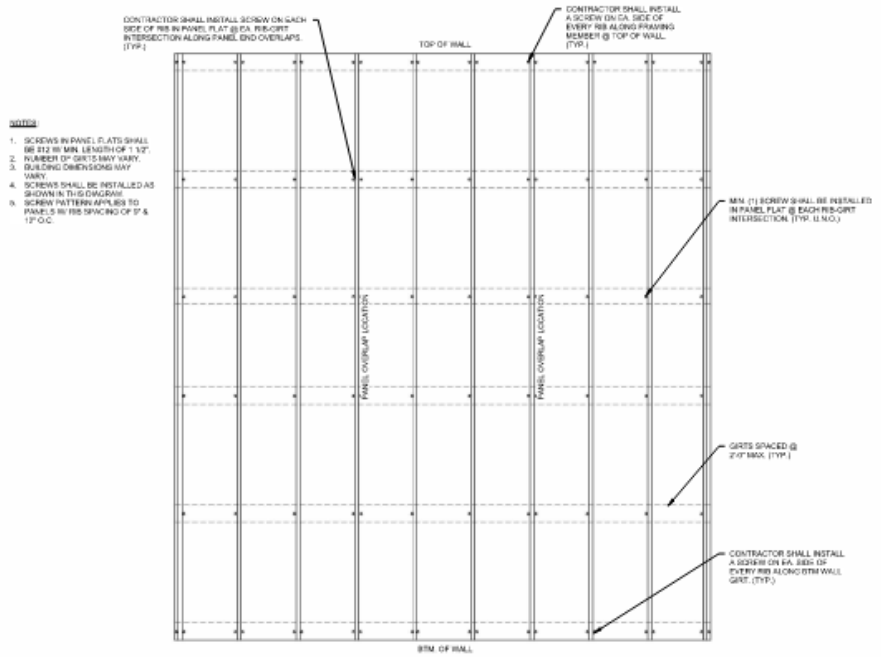

2 Wall Metal Connection Detail
1" = 1'-0"

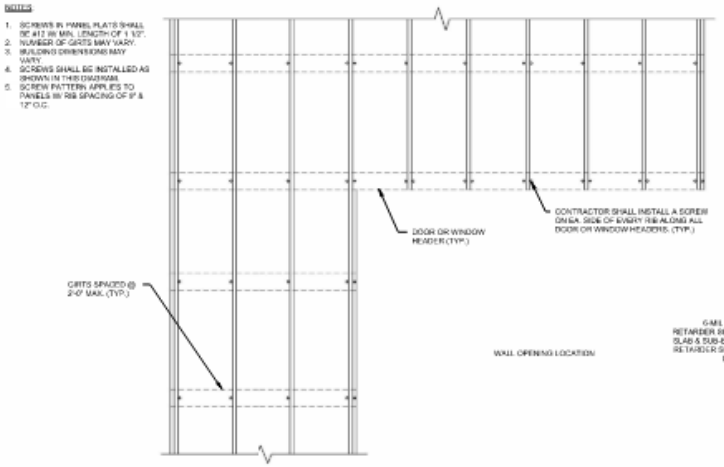

3 Metal Connection at Wall Opening Detail
1" = 1'-0"

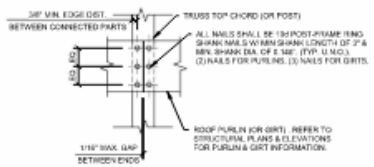

4 Typ. Purlin & Girt Splice Detail
3" = 1'-0"

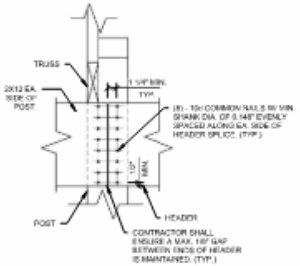

5 Typ. Header Splice at Post Detail
1 1/2" = 1'-0"

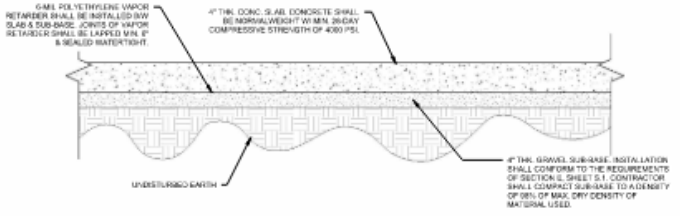

6 Typ. Slab Installation Detail
1 1/2" = 1'-0"

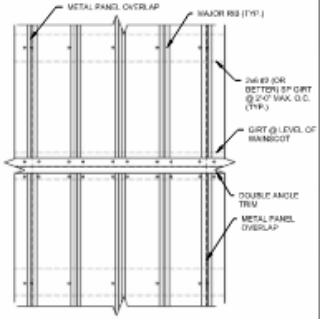

7 Typ. Wainscot Screw Detail
1" = 1'-0"

Current Revision

Number	Date	Description
A	10/7/25	ADDED PER PERMIT REVIEW

Structural Details

Project No.
146121

Issued Status
FOR CONSTRUCTION

Heritage Middle School

4803 Columbia Pike
Thompson's Station, TN.
37179

SUMMERTOWN METALS
3664 Summertown Hwy.
Summertown, TN 38483
Phone: (931) 796-1521
www.summertownmetals.com

Date Issued
9/22/2025

Scale
As indicated

Drawn By
CBP

Checked By
CBP

COA FIRM #: 2139

Sheet
S.4

THESE PLANS ARE THE SOLE PROPERTY OF SUMMERTOWN METALS, LLC. ANY UNAUTHORIZED REPRODUCTION OF THESE PLANS IS STRICTLY PROHIBITED.

Facilities & Construction
1320 West Main Street, Suite 202
Franklin, Tennessee 37064
(615) 472-4040

MEMORANDUM

November 4, 2025

TO: **Williamson County Board of Education**

CC: **Jason Golden, Superintendent of School**
Brian King, Assistant Superintendent of Operations

FROM: **Eric J. Gardner, P.E., Director of Facilities & Construction**

RE: **Mill Creek Elementary School Shade Structure Request**

Mill Creek Elementary School is requesting permission to install a shade structure in the playground area. The project is fully funded by the Mill Creek Elementary PTO.

Staff recommends approval.


York Trl
Mill Creek Middle School
200
100
2552
York Rd
York Rd
York Rd
York Rd
Google Maps
Layers



Hip Shade

Length	20'	**Width**	20'	**Entry Height**	8'
Peak Height	11.7'	**Elbow**	Standard	**Column Mount**	Embedded
Column Size	Ø5.0" 11-Ga	**Rafter Size**	Ø3.5" 11-Ga	**Ridge Size**	Ø3.5" 11-Ga
Column Length	11'	**Rafter Length**	13.04'	**Ridge Length**	5'
Dome Qty.	1	**Column Qty.**	4		

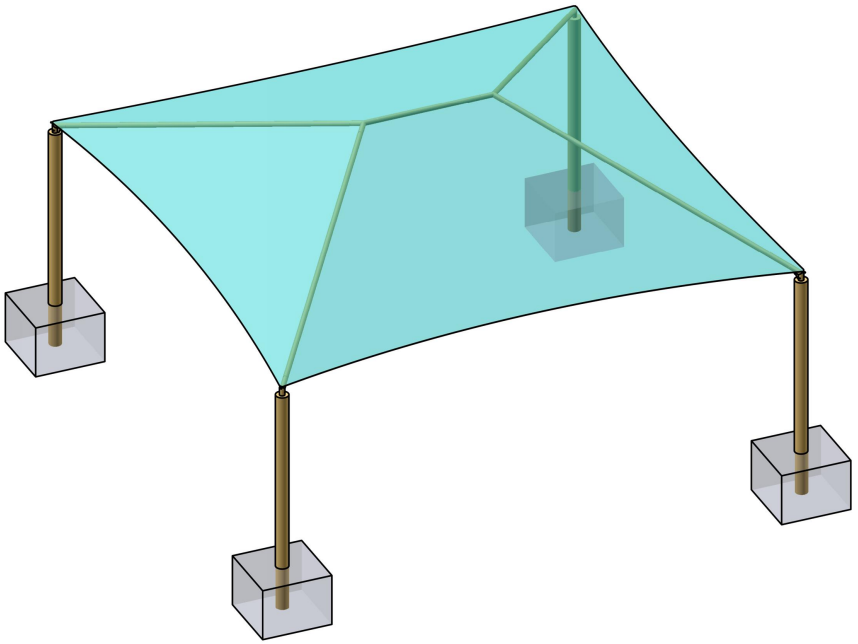

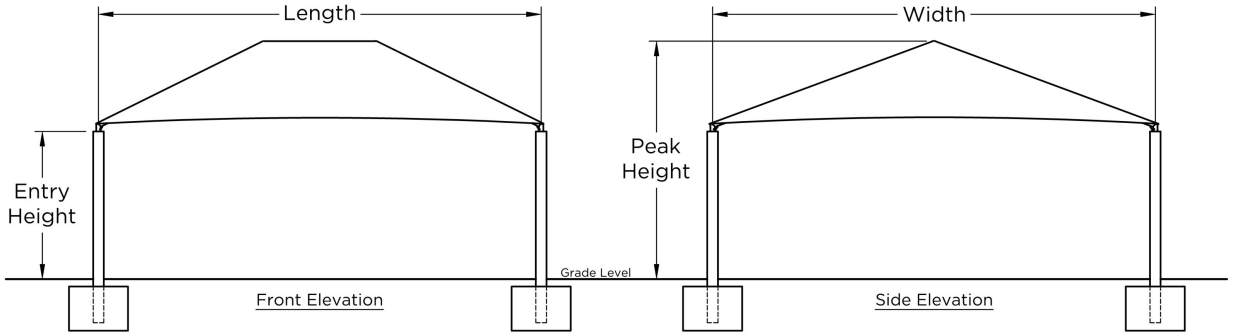

Square Footing		
Column	Length & Width	Depth
Single Cap	2.53	3
Double Cap	N/A	3

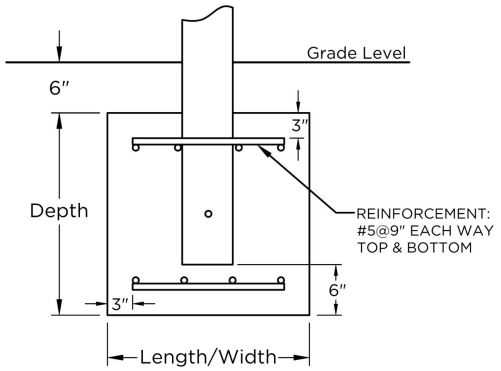

Auger Footing		
Diameter	Single Cap Depth	Double Cap Depth
1'-6"		
2'-0"	4.9	N/A
2'-6"	3.14	N/A
3'-0"	Out of range	N/A

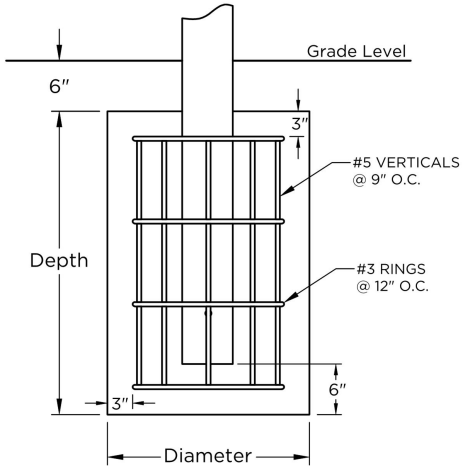

Superior Shade

QUOTE	SHADE SIZE	SHADE STYLE
111127	20 X 20	Hip Shade

These drawings are for reference only and should not be used as construction details. They show the general character and rough dimensions of the structural features. Exact spans, fasteners, materials, and foundations can be determined by a licensed professional engineer upon request. Estimated footing size above is based on 1,500 PSF soil bearing pressure.

1-800-390-8438
www.GreatSouthernRec.com

Beautiful Outdoor Spaces, we can ALL be proud of.

ORGANIZATION:	Mill Creek Elementary
CONTACT:	Lisa Hall
ADDRESS:	100 York Rd, Nolensville, TN 37135
EMAIL:	lisa.hall@wcs.edu

PROJECT TITLE:	Shade Quote
REVISION:	1
OPTION:	1

Official Quote from Great Southern Recreation

RFB-1364A CONTRACT

TERRITORY MANAGER	DATE	TERRITORY	COUNTY	TERMS	COLORS
Kyle Peggram	8.25.25	1	Williamson	N30	TBD

PART NUMBER	QUANTITY	DESCRIPTION	UNIT PRICE	TOTAL
SRP20208	1	Four Post HIP Shade Structure at 20'x20'8'	$ 6,890.00	$ 6,890.00
				$ -
				$ -
				$ -
				$ -
			SUBTOTAL FOR EQUIPMENT	$ 6,890.00
		Certified Southern-built ™ Installation		$ 6,100.00
SITEWORK		*Installed into existing grade*		$ -
DISCOUNT	5%	REQUIRED RFB-1364A CONTRACT DISCOUNT		$ (344.50)
			SUBTOTAL	$ 12,645.50

TAX RATE	9.00%
SALES TAX	-

BONDS	
EQUIPMENT FREIGHT	900.00
SURFACE FREIGHT	

TOTAL	$ 13,545.50

Please Note Exclusions and Expectations on Attached Contract Form

Facilities & Construction
1320 West Main Street, Suite 202
Franklin, Tennessee 37064
(615) 472-4040

MEMORANDUM

November 4, 2025

TO: **Williamson County Board of Education**

CC: **Jason Golden, Superintendent of School**
Brian King, Assistant Superintendent of Operations

FROM: **Eric J. Gardner, P.E., Director of Facilities & Construction**

RE: **Page High School Girls Locker Room Renovation Request**

Page High School is requesting permission to renovate the girls' basketball locker room in the Ringstaff Gym. The proposed improvements include:

- Demolition of flooring, existing electrical equipment, and lockers
- Repair drywall and floor base
- Installation of new lockers
- Floor replacement
- Installation of new electrical outlets
- Painting

The project is fully funded by the Page High School Girls Basketball Booster Club. The following conditions apply to obtaining approval.

- The project must be submitted and approved by the Williamson County Codes Department.
- The contractor will submit a Certificate of Insurance naming WCS as additional insured and all employees working on WCS property will have passed a background check.
- Construction cannot begin until Williamon County permits have been issued.

Staff recommends approval.

Building Modification Request

PLEASE PRINT TO COMPLETE

Incomplete forms and missing required documents will delay approval or cause denial of the request.

**** Required Fields***

* School: PAGE HIGH SCHOOL Requested By: RANDY COFFMAN

* Justification for Request: (Ex: Increased Enrollment, Program Change, New Program Requirement)

UPGRADE GIRLS BASKETBALL LOCKER ROOM SPACE IN THE RINDSTAFF GYM. GIRLS BASKETBALL HAS OUTGROWN CURRENT SPACE. UPDATING OF SPACE IS ALSO NECESSARY.

* Scope of Work: REMOVING EXISTING INFERIOR WALLS AND LOCKERS. INSTALLING NEW LOCKERS AND FLOORING. PLANS & SCOPE OF WORK INCLUDED IN QUOTE.

* Attach plans and a sketched map showing the exact location.

* Funding Source: PATRIOTS ATHLETIC CLUB

* Attach proof of available funding for total project amount.

* Estimated Cost (Attach quotes): $25,580.60 (DEMO + CLEAN UP) $16,670.00 (LOCKERS + INSTALL)

* Principal Signature: _____ Date: _____

Principal, send this completed form and attachments to your Assistant Superintendent.

This section to be completed by Central Office staff.

Ass't Superintendent Signature: _____ Date: _____

(After reviewing, please send this form and attachments to the Director of Facilities & Construction)

Requires WCS Board Approval: Yes ____ No _____

Director of Facilities & Construction Comments: _____

Director of Facilities & Construction Signature: _____ Date: _____

Forwarded to Maintenance by Director of Facilities & Construction on Date: Maintenance Recommendations: _____

Director of Maintenance Signature: _____ Date: _____

TURNER
CONSTRUCTION SERVICES

ESTIMATE #	DATE	EXPIRES
32	08/11/2025	10/31/2025

Demolition	Qty	Cost/Unit	Total
Flooring removal	1	$1,665.00	$1,665.00
Removal of all existing plank flooring in locker room, tv room, and hallway			
Door Cut and removal	1	$233.10	$233.10
Existing door and header to be cut and removed. Cut vertical corner flush with existing wall to create seamless transition at corner.			
Demolition of all thresholds, Grind Down flush to floor	1	$166.50	$166.50
Demolition of Existing Electrical	1	$1,332.00	$1,332.00
Removal outlets and mc cable, trace circuit to home run, establish circuit for future use- 4 outlets on existing and new TV wall.			

Subtotal: $9,113.10

Repair	Qty	Cost/Unit	Total
Drywall and Paint	1	$1,998.00	$1,998.00
Block fill and taper new masonry, coat ceiling corner to corner with new surface, prime and paint new drywall and masonry surfaces with like materials and/or colors provided by Page HS.			
New Rubber Base	1	$288.60	$288.60
Removal and Disposal of Rubber Base, Repair CMU block wall and remove glue on walls to prep for new rubber base.			
Floor Repair, Prep, and Leveling	1	$497.28	$497.28
Repair concrete floor, prep floor and remove damages, level floor at damaged and repaired areas for new flooring			

Subtotal: $2,783.88

Construction	Qty	Cost/Unit	Total
New Flooring Material (Allowance)	576	$2.50	$1,440.00
New Flooring purchase Allowance at $3.28/SF. This allowance will provide the for the selection of new flooring by ownership.			
New Flooring Installation Labor	1	$3,450.99	$3,450.99
New Flooring installation, including new thresholds.			
Electrical Installation at side wall	1	$1,926.25	$1,926.25
Installation of the 4x new outlets with conduit. One outlet set at 60" for TV. Assist ownership with installation of new television.			

Subtotal: $6,817.24

TURNER
CONSTRUCTION SERVICES

ESTIMATE #	DATE	EXPIRES
32	08/11/2025	10/31/2025

Title: Page HS Locker Room

CUSTOMER

Page High School
Randy Coffman
6281 Arno Road
Franklin, TN 37064

SERVICE ADDRESS

6281 Arno Road
Franklin, TN 37064

SUMMARY

Turner Construction Services in pleased to propose the renovation of the girls locker room at Page High School. The renovation includes demolition of existing space and the renovation of the walls, flooring, ceiling, and electrical. Special considerations will be made to contain the dust created by use of a HIPA filtration system.

General Conditions	Qty	Cost/Unit	Total
Dumpsters	1	$832.50	$832.50
Protection- Plastic, Sheathing, Tape, Materials	1	$250.00	$250.00
Hallway/Project Cleaning in adjacent spaces	1	$111.00	$111.00
GC Insurance- Builders Risk Police	1	$1,096.68	$1,096.68
HEPA Filtration- Filter and Machine Rental	1	$777.00	$777.00
TCS Profit and Overhead	1	$3,000.00	$3,000.00

Subtotal: $6,067.18

Demolition	Qty	Cost/Unit	Total
Blockwall Demo	1	$2,664.00	$2,664.00
Saw Cutting and Demolition of 26 LF x 10ft non-weight bearing block wall			
Lockers	1	$499.50	$499.50
Demolition and Removal of lockers along block wall to be demoed.			
Concrete above slab footers	1	$2,553.00	$2,553.00
Jackhammer and demolition of the existing concrete footer beneath the wood lockers. Concrete footers to be completely removed along CMU wall. Footers to be demoed to minimum 1/8" beneath surrounding floor.			

TURNER
CONSTRUCTION SERVICES

ESTIMATE #	DATE	EXPIRES
32	08/11/2025	10/31/2025

Completion	Qty	Cost/Unit	Total
Punchlist, Pointe up, Touchups	1	$444.00	$444.00
Final Cleaning of Jobsite	1	$355.20	$355.20

Subtotal: $799.20

PRODUCER
Templeton & Associates Insurance
108 EAST DEPOT STREET
P.O. BOX 617
SHELBYVILLE, TN 37162

CONTACT NAME: Zack Zeis
PHONE (A/C, No, Ext): 931-684-4380 FAX (A/C, No):
E-MAIL ADDRESS: zzeis@templetonins.com

INSURER(S) AFFORDING COVERAGE	NAIC #
INSURER A : Auto-Owners Insurance	
INSURER B :	
INSURER C :	
INSURER D :	
INSURER E :	
INSURER F :	

INSURED
Turner Construction Services LLC
228 Temple Ford Rd
Shelbyville, TN 37160

COVERAGES CERTIFICATE NUMBER: REVISION NUMBER:

THIS IS TO CERTIFY THAT THE POLICIES OF INSURANCE LISTED BELOW HAVE BEEN ISSUED TO THE INSURED NAMED ABOVE FOR THE POLICY PERIOD INDICATED. NOTWITHSTANDING ANY REQUIREMENT, TERM OR CONDITION OF ANY CONTRACT OR OTHER DOCUMENT WITH RESPECT TO WHICH THIS CERTIFICATE MAY BE ISSUED OR MAY PERTAIN, THE INSURANCE AFFORDED BY THE POLICIES DESCRIBED HEREIN IS SUBJECT TO ALL THE TERMS, EXCLUSIONS AND CONDITIONS OF SUCH POLICIES. LIMITS SHOWN MAY HAVE BEEN REDUCED BY PAID CLAIMS.

INSR LTR	TYPE OF INSURANCE	ADDL INSD	SUBR WVD	POLICY NUMBER	POLICY EFF (MM/DD/YYYY)	POLICY EXP (MM/DD/YYYY)	LIMITS	
A	✓ COMMERCIAL GENERAL LIABILITY CLAIMS-MADE ✓ OCCUR GEN'L AGGREGATE LIMIT APPLIES PER: ✓ POLICY PRO-JECT LOC OTHER:	x		03752616	12/27/2024	12/27/2025	EACH OCCURRENCE DAMAGE TO RENTED PREMISES (Ea occurrence) MED EXP (Any one person) PERSONAL & ADV INJURY GENERAL AGGREGATE PRODUCTS - COMP/OP AGG	$ 1,000,000 $ 300,000 $ 10,000 $ 1,000,000 $ 2,000,000 $ 2,000,000
A	AUTOMOBILE LIABILITY ANY AUTO OWNED AUTOS ONLY ✓ SCHEDULED AUTOS HIRED AUTOS ONLY NON-OWNED AUTOS ONLY			55-752616-00	04/07/2025	04/07/2026	COMBINED SINGLE LIMIT (Ea accident) BODILY INJURY (Per person) BODILY INJURY (Per accident) PROPERTY DAMAGE (Per accident)	$ 1,000,000
A	✓ UMBRELLA LIAB ✓ OCCUR EXCESS LIAB CLAIMS-MADE DED RETENTION $			55-752616-01	05/07/2025	05/07/2026	EACH OCCURRENCE AGGREGATE	$ 3,000,000
	WORKERS COMPENSATION AND EMPLOYERS' LIABILITY ANY PROPRIETOR/PARTNER/EXECUTIVE OFFICER/MEMBER EXCLUDED? Y/N N/A (Mandatory in NH) If yes, describe under DESCRIPTION OF OPERATIONS below						PER STATUTE OTH-ER E.L. EACH ACCIDENT E.L. DISEASE - EA EMPLOYEE E.L. DISEASE - POLICY LIMIT	$ $ $

Subtotal	$25,580.60
Tax: (0%)	$0.00
Total	**$25,580.60**

428633

State of Tennessee

BOARD FOR LICENSING CONTRACTORS
CONTRACTOR
TURNER CONSTRUCTION SERVICES, LLC

This is to certify that all requirements of the State of Tennessee have been met.

ID NUMBER: 73316
LIC STATUS: ACTIVE
EXPIRATION DATE: April 30, 2027
$620,000.00; BC-A; BC-b(sm); LMC

IN-1313
DEPARTMENT OF
COMMERCE AND INSURANCE

INCLUSIONS

All project labor, materials, supervision, equipment and cleanup to complete the project per the agreed upon plans and descriptions. Level 3 drywall repair at demoed CMU ceiling locations.

EXCLUSIONS

Painting, Level 4 or above drywall repair or finishing, Masonry repair and finishes, Lighting replacement, HVAC vent replacement, Plumbing, Structural Rework, Unforeseen in wall conditions.

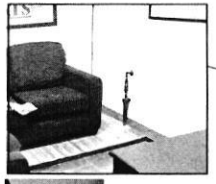





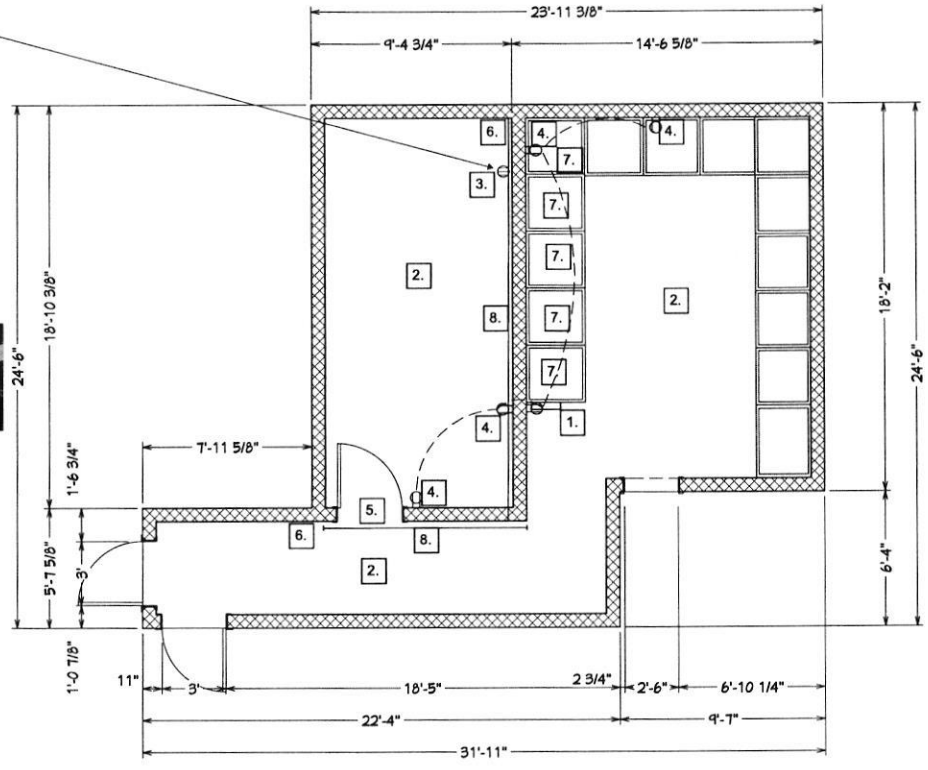

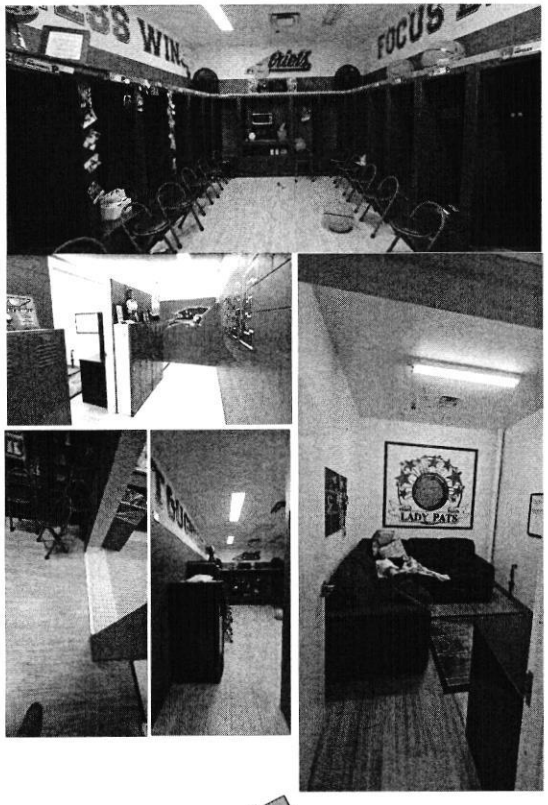

DEMOLITION:

1. REMOVE EXISTING CONCRETE LOCKER FOOTER BENEATH LOCKERS (DEMO WALL ONLY, OPPOSITE SIDE FOOTER TO REMAIN)
2. REMOVE EXISTING FLOORING & THRESHOLDS IN LOCKER ROOM, HALLWAY, & TV ROOM
3. REMOVE AND CAP EXISTING PIPE IN TV ROOM, HAMMER DRILL CAP BENEATH EXISTING CONCRETE
4. REMOVE ELETRICAL OUTLETS AND WIRE NUT IN THE CEILING FOR FUTHER USE
5. REMOVE EXISTING DOOR
6. ~~CUT FLUSH BLOCK WALL~~
7. REMOVE LOCKERS AND STORE IN BATHROOM FOR OTHERS TO PICKUP
8. REMOVE BLOCK WALL (CEILINGS ARE 10FT)

NOTE:
- HEPA FILTER TO BE USED FOR DUST
- PLASTC BUILT ON OPENINGS TO CONTROL DUST
- DUMPSTER WILL BE LOCATED OUTSIDE THE BUILDING, USE RAMP
- CMU BLOCK IS NON-WEIGHT BEARING
- LOCKER NO DEMOED WILL BE REMOVED BY OTHERS

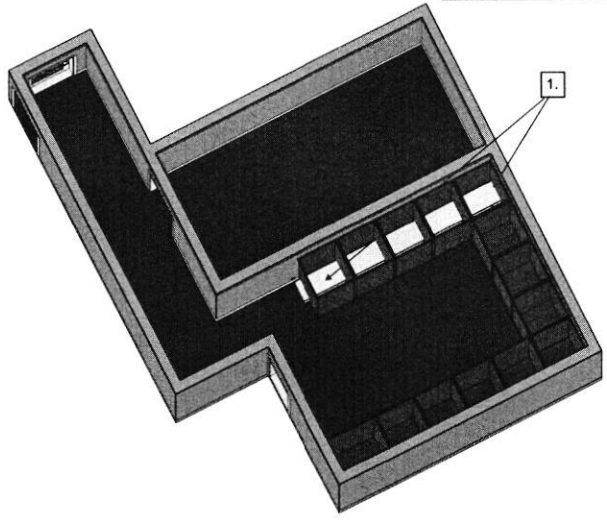

NO.	DESCRIPTION	BY	DATE

SHEET TITLE: EXISTING CONDITIONS

PROJECT DESCRIPTION: PAGE HS LOCKER ROOM

DRAWINGS PROVIDED BY: TURNER CONSTRUCTION SERVICES

DATE:

SCALE:

SHEET: G-1

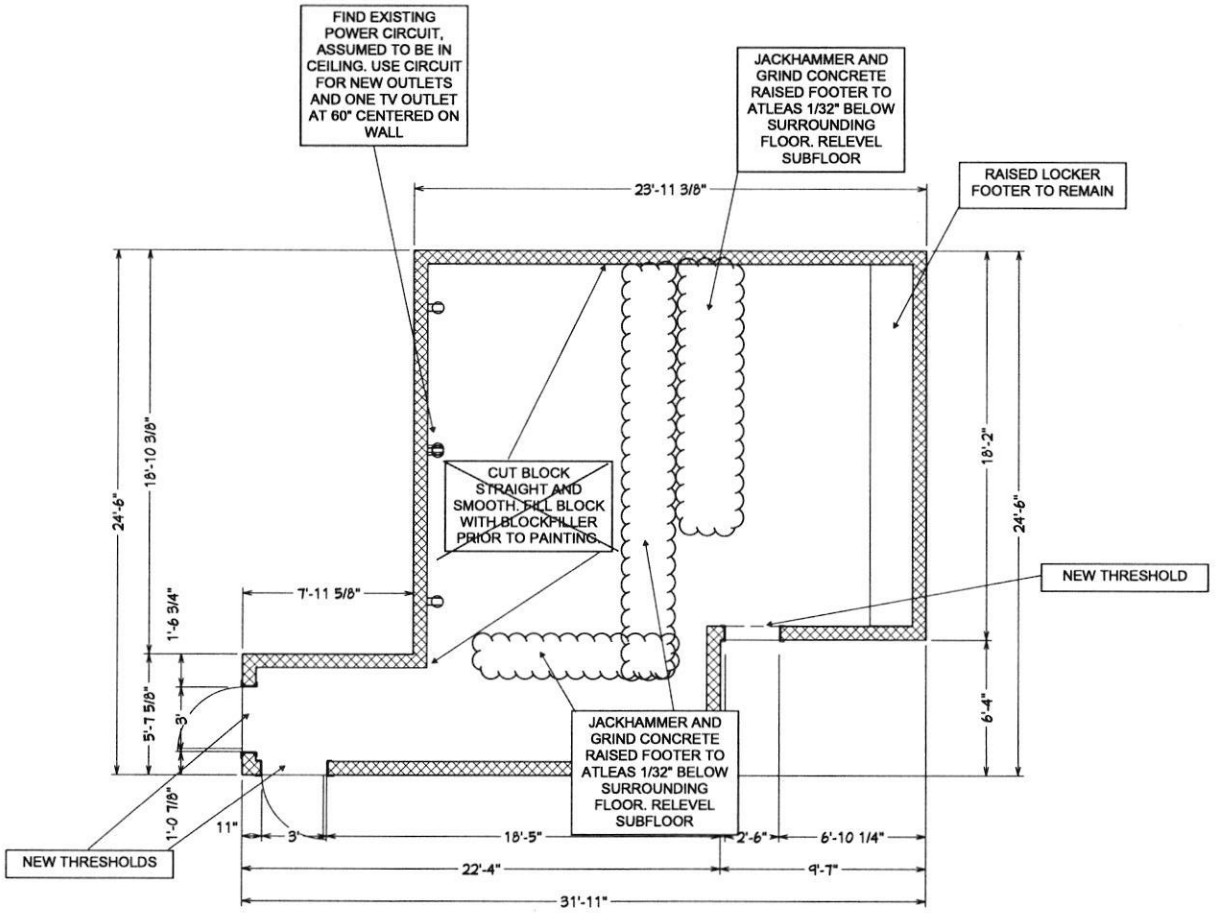

1st Floor

NO.	DESCRIPTION	BY	DATE

SHEET TITLE: REPAIR AND RENOVATE

PROJECT DESCRIPTION: PAGE HS LOCKER ROOM

DRAWINGS PROVIDED BY: TURNER CONSTRUCTION SERVICES

DATE:

SCALE:

SHEET: R-1

1. ~~REPAIR AND REPAINT WALLS CORNER TO CORNER WITH WALL COLORS~~
2. ~~REPAIR, REFINISH, SKIM, AND PAINT CEILING CORNER TO CORNER WITH CEILING COLOR~~
3. INSTALL NEW VINYL PLANK FLOORING THROUGHOUT
4. INSTALL RUBBER BASE
5. CONTRACTOR TO ASSIST OWNER IN MOUNTING NEW TELEVISION (TV PROVIDED BY OWNER)
6. INSTALL NEW THRESHOLDS AT TWO ACCESS DOORS AND ONE DOORWAY
7. ~~REPLACE CEILING BULBS AS NEEDED~~

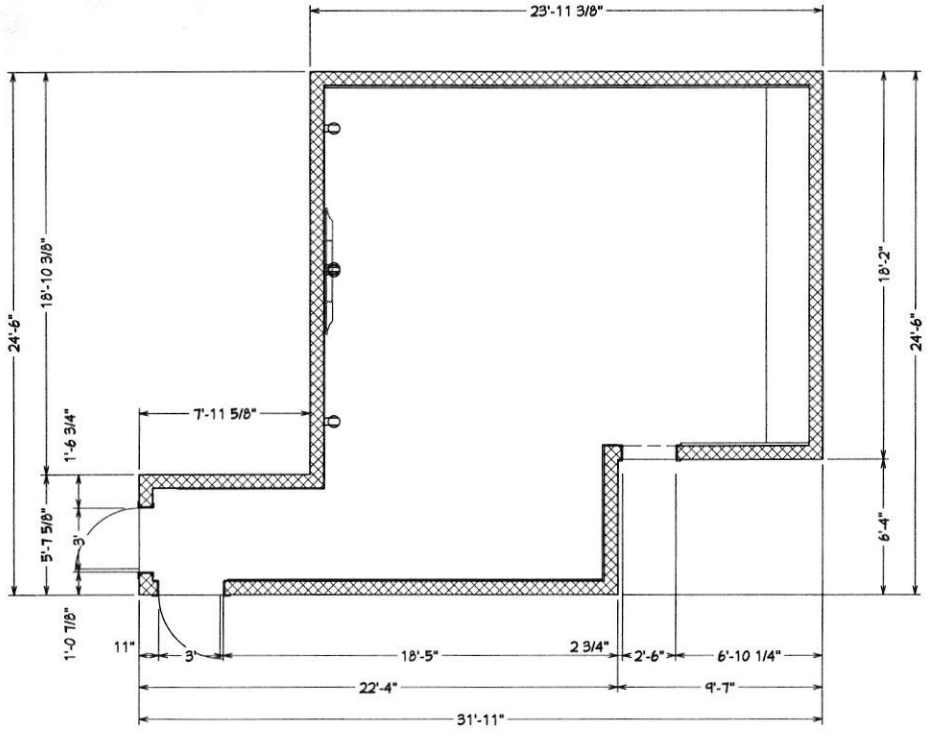

1st Floor

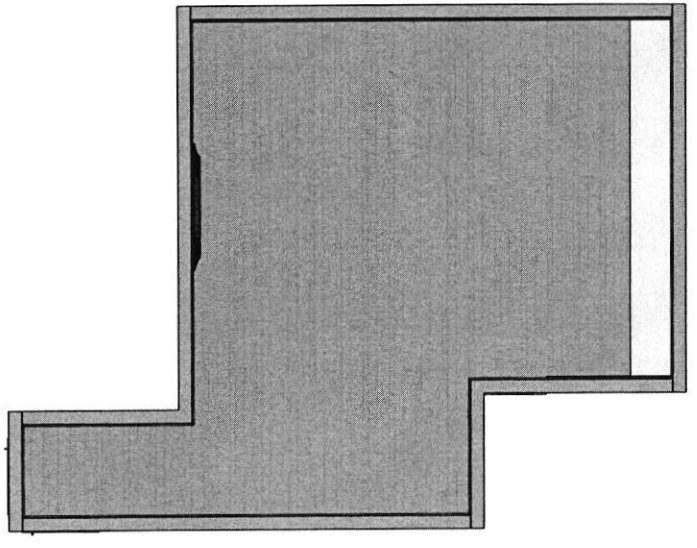

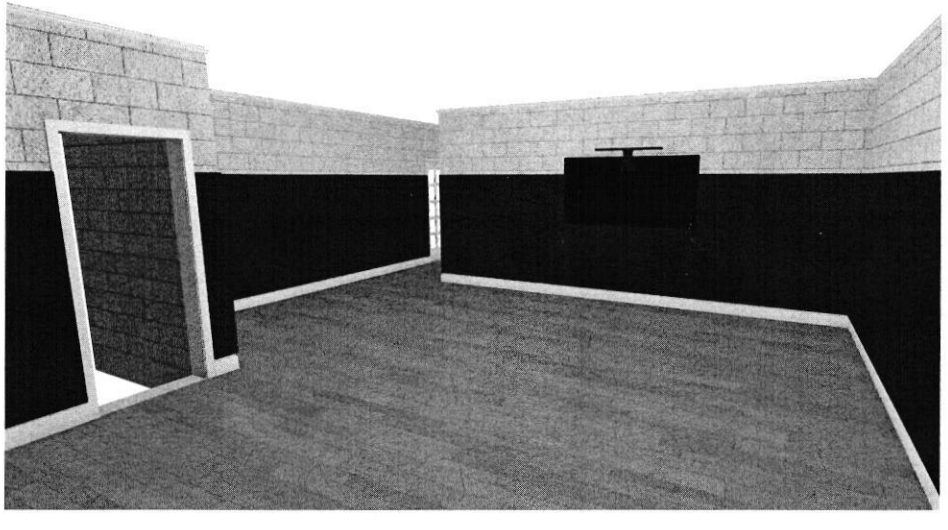

Camera 3

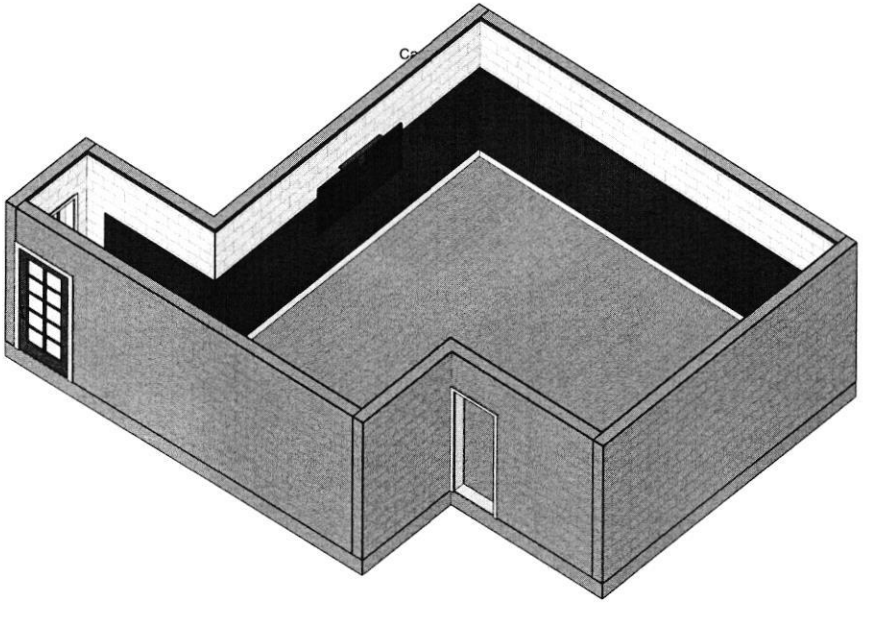

NO.	DESCRIPTION	BY	DATE

SHEET TITLE: CONSTRUCTION AND FINISH

PROJECT DESCRIPTION: PAGE HS LOCKER ROOM

DRAWINGS PROVIDED BY: TURNER CONSTRUCTION SERVICES

DATE:

SCALE:

SHEET: A-1

TPS - Turner Project Services, LLC
7764 Second Fiddle Way, Arrington, TN.

Proposal # 0067 - 2025

Date: 12/12/2025

Attn: Randy Coffman
Page High School
6281 Arno Road
Franklin, TN 37064

Proposal for Locker Room Remodel:

Turner Project Services is pleased to provide you with an estimate to renovate the female locker room at Page High School. This proposal includes the cost to hire a general contractor to demolish an existing space and rebuild the walls, flooring, ceiling, and electrical as discussed in our meeting at the site on September 4, 2025.

Section	Description	Estimated $
100	General Conditions	$ 10,500.00
200	Demolition	$ 9,900.00
300	Masonry repairs	$ 10,200.00
400	Electrical	$ 2,100.00
500	Painting / Drywall	$ 1,600.00
600	Flooring	$ 6,500.00
700	HVAC	$ 750.00
700	Miscellaneous (insurance, bond)	included
	TOTAL	**$ 41,550.00**

Qualifications:

1) Turner Projects Services, LLC (aka TPS) is a TX based corporation doing business in Tennessee as TPS.

2) TPS is not a license General Contractor in Tennessee.

3) This Cost Estimate should be considered a Not-to-exceed value for the proposed work.

Mark M Turner 9/15/2025

Mark M Turner Date

Avenue CONSTRUCTION, LLC

Page High - Girl's Locker Room

Description		Cost
Scope of Work		
Demo - Block/concrete removal, concrete cutting, remove lockers, remove flooring, electrical demo	**$**	**22,265.00**
Repairs - masonry, patch drywall, prep floors and walls	**$**	**8,350.00**
Finishes - Electrical trim out, new flooring material not to exceed $3k, final paint-colors selected by Page.	**$**	**12,225.00**
Punch & Final Clean	**$**	**1,250.00**
OH/Profit	$	4,409
	$	**48,499**

X

Owner

X

Avenue Construction, LLC
Contractor

H.E.
HODGE COMPANY
integrity•innovation•ingenuity•impact
2393 Pendley Rd. Ste 200
Cumming, GA 30041

QUOTATION

DATE: 5/22/2025

Attn: Coach Coffman
From: David Schuessler
Phone: 205-706-2354
Main Office: 770-205-8312
Fax: 770-205-8318

Project: Page High School Girls BBALL
Location: Franklin, TN

PRICING:

Product	**24"Wx18"D** Welded Athletic Lockers			
Manufacturer	List Industries			
How Approved	By request			
Freight	Included			
Installation	Included			
Sales Tax	Not included	*9.75% Sales Tax in pricing details		
Bid Price	**$ 16,150.00**			

DESCRIPTION:

18 Frames – List Fully-Framed All-Welded All-Star MVP Athletic Lockers, 24"Wx18"Dx72"H, Upper 12"W Security Boxes, Lower Footlockers, Stainless Steel Coat Rods, Flat Tops, 2-3/4" Integral Bases, (1) Corner, (4) Filler Panels, No Locks, Color & Numbering TBD

WARRANTY:

List Fully-Framed All-Welded All-Star MVP Athletic Lockers carry a Manufacturer's LIFETIME Warranty.

QUOTE DETAILS:

Quote is based on product standard design, construction and color selection based on plans and specs provided. Any customization that is different from product standard would result in added fees.

Continued....

H.E.
HODGE COMPANY
integrity•innovation•ingenuity•impact

2393 Pendley Rd. Ste 200
Cumming, GA 30041

PRICING DETAILS:

- Pricing good for 2025 Shipment.
- ADD approx. 3% for 2026 Shipment.
- Price includes Material, Freight, Unload and Installation.
- Demo of existing lockers by others. Price can be given if required.
- Filler Panel included to cover existing pipe.
- Price and frame total subject to change after wall demo and additional field measurement.
- TWO-TONE Color Combination available at no additional charge. Security Box Doors and Footlocker Seats can be a different color than Frames/Bodies/Trim.
- Locks NOT included. Security Boxes can take Built-in Locks or Padlocks. Footlockers take padlocks only.
- 9.75% Sales tax NOT included.
  If applicable ADD $1,070.00
- Deposit may be required upon request.
- List Lockers Made in USA

Thank you.

David Schuessler

H.E.
HODGE COMPANY
integrity•innovation•ingenuity•impact

www.hehodge.com
2393 Pendley Road Suite 200
Cumming, GA 30041
Cell: (205) 706-2354
Office: (770) 205-8312 ext.16
Facsimile: (770) 205-8318
dschuessler@hehodge.com

H.E.
HODGE COMPANY
integrity•innovation•ingenuity•impact
2393 Pendley Rd. Ste 200
Cumming, GA 30041

QUOTATION

DATE: 5/22/2025

Attn: Coach Coffman
From: David Schuessler
Phone: 205-706-2354
Main Office: 770-205-8312
Fax: 770-205-8318

Project: Page High School Girls BBALL
Location: Franklin, TN

PRICING:

Product	**24"Wx24"D** Welded Athletic Lockers			
Manufacturer	List Industries			
How Approved	By request			
Freight	Included			
Installation	Included			
Sales Tax	Not included	*9.75% Sales Tax in pricing details		
Bid Price	**$ 16,670.00**			

DESCRIPTION:

17 Frames – List Fully-Framed All-Welded All-Star MVP Athletic Lockers, 24"Wx24"Dx72"H, Upper 12"W Security Boxes, Lower Footlockers, Stainless Steel Coat Rods, Flat Tops, 2-3/4" Integral Bases, (1) Corner, (4) Filler Panels, No Locks, Color & Numbering TBD

WARRANTY:

List Fully-Framed All-Welded All-Star MVP Athletic Lockers carry a Manufacturer's LIFETIME Warranty.

QUOTE DETAILS:

Quote is based on product standard design, construction and color selection based on plans and specs provided. Any customization that is different from product standard would result in added fees.

Continued....

H.E.
HODGE COMPANY
integrity•innovation•ingenuity•impact

2393 Pendley Rd. Ste 200
Cumming, GA 30041

PRICING DETAILS:

- Pricing good for 2025 Shipment.
- ADD approx. 3% for 2026 Shipment.
- Price includes Material, Freight, Unload and Installation.
- Demo of existing lockers by others. Price can be given if required.
- Filler Panel included to cover existing pipe.
- Price and frame total subject to change after wall demo and additional field measurement.
- TWO-TONE Color Combination available at no additional charge. Security Box Doors and Footlocker Seats can be a different color than Frames/Bodies/Trim.
- Locks NOT included. Security Boxes can take Built-in Locks or Padlocks. Footlockers take padlocks only.
- 9.75% Sales tax NOT included.
  If applicable ADD $1,115.00
- Deposit may be required upon request.
- List Lockers Made in USA

Thank you.

David Schuessler

H.E.
HODGE COMPANY
integrity•innovation•ingenuity•impact

www.hehodge.com
2393 Pendley Road Suite 200
Cumming, GA 30041
Cell: (205) 706-2354
Office: (770) 205-8312 ext.16
Facsimile: (770) 205-8318
dschuessler@hehodge.com

H.E.
HODGE COMPANY
integrity•innovation•ingenuity•impact
2393 Pendley Rd. Ste 200
Cumming, GA 30041

QUOTATION

DATE: 5/22/2025

Attn: Coach Coffman
From: David Schuessler
Phone: 205-706-2354
Main Office: 770-205-8312
Fax: 770-205-8318

Project: Page High School Girls BBALL
Location: Franklin, TN

PRICING:

Product	**18"Wx24"D** Welded Athletic Lockers			
Manufacturer	List Industries			
How Approved	By request			
Freight	Included			
Installation	Included			
Sales Tax	Not included	*9.75% Sales Tax in pricing details		
Bid Price	**$ 18,040.00**			

DESCRIPTION:

22 Frames – List Fully-Framed All-Welded All-Star MVP Athletic Lockers, 18"Wx24"Dx72"H, Upper 12"W Security Boxes, Lower Footlockers, Stainless Steel Coat Rods, Flat Tops, 2-3/4" Integral Bases, (1) Corner, (4) Filler Panels, No Locks, Color & Numbering TBD

WARRANTY:

List Fully-Framed All-Welded All-Star MVP Athletic Lockers carry a Manufacturer's LIFETIME Warranty.

QUOTE DETAILS:

Quote is based on product standard design, construction and color selection based on plans and specs provided. Any customization that is different from product standard would result in added fees.

Continued....

H.E.
HODGE COMPANY
integrity•innovation•ingenuity•impact

2393 Pendley Rd. Ste 200
Cumming, GA 30041

PRICING DETAILS:

- Pricing good for 2025 Shipment.
- ADD approx. 3% for 2026 Shipment.
- Price includes Material, Freight, Unload and Installation.
- Demo of existing lockers by others. Price can be given if required.
- Filler Panel included to cover existing pipe.
- Price and frame total subject to change after wall demo and additional field measurement.
- TWO-TONE Color Combination available at no additional charge. Security Box Doors and Footlocker Seats can be a different color than Frames/Bodies/Trim.
- Locks NOT included. Security Boxes can take Built-in Locks or Padlocks. Footlockers take padlocks only.
- 9.75% Sales tax NOT included.
  If applicable ADD $1,197.00
- Deposit may be required upon request.
- List Lockers Made in USA

Thank you.

David Schuessler

H.E.
HODGE COMPANY
integrity•innovation•ingenuity•impact

www.hehodge.com
2393 Pendley Road Suite 200
Cumming, GA 30041
Cell: (205) 706-2354
Office: (770) 205-8312 ext.16
Facsimile: (770) 205-8318
dschuessler@hehodge.com

H.E.
HODGE COMPANY
integrity•innovation•ingenuity•impact
2393 Pendley Rd. Ste 200
Cumming, GA 30041

QUOTATION

DATE: 5/22/2025

Attn: Coach Coffman
From: David Schuessler
Phone: 205-706-2354
Main Office: 770-205-8312
Fax: 770-205-8318

Project: Page High School Girls BBALL
Location: Franklin, TN

PRICING:

Product	**18"Wx18"D** Welded Athletic Lockers			
Manufacturer	List Industries			
How Approved	By request			
Freight	Included			
Installation	Included			
Sales Tax	Not included	*9.75% Sales Tax in pricing details		
Bid Price	**$ 17,270.00**			

DESCRIPTION:

23 Frames – List Fully-Framed All-Welded All-Star MVP Athletic Lockers, 18"Wx18"Dx72"H, Upper 12"W Security Boxes, Lower Footlockers, Stainless Steel Coat Rods, Flat Tops, 2-3/4" Integral Bases, (1) Corner, (4) Filler Panels, No Locks, Color & Numbering TBD

WARRANTY:

List Fully-Framed All-Welded All-Star MVP Athletic Lockers carry a Manufacturer's LIFETIME Warranty.

QUOTE DETAILS:

Quote is based on product standard design, construction and color selection based on plans and specs provided. Any customization that is different from product standard would result in added fees.

Continued....

H.E.
HODGE COMPANY
integrity•innovation•ingenuity•impact

2393 Pendley Rd. Ste 200
Cumming, GA 30041

PRICING DETAILS:

- Pricing good for 2025 Shipment.
- ADD approx. 3% for 2026 Shipment.
- Price includes Material, Freight, Unload and Installation.
- Demo of existing lockers by others. Price can be given if required.
- Filler Panel included to cover existing pipe.
- Price and frame total subject to change after wall demo and additional field measurement.
- TWO-TONE Color Combination available at no additional charge. Security Box Doors and Footlocker Seats can be a different color than Frames/Bodies/Trim.
- Locks NOT included. Security Boxes can take Built-in Locks or Padlocks. Footlockers take padlocks only.
- 9.75% Sales tax NOT included.
  If applicable ADD $1,133.00
- Deposit may be required upon request.
- List Lockers Made in USA

Thank you.

David Schuessler

H.E.
HODGE COMPANY
integrity•innovation•ingenuity•impact

www.hehodge.com
2393 Pendley Road Suite 200
Cumming, GA 30041
Cell: (205) 706-2354
Office: (770) 205-8312 ext.16
Facsimile: (770) 205-8318
dschuessler@hehodge.com

ELEVATION ' '

SUPERIOR "ALL-STAR MVP" WELDED ATHLETIC LOCKER (PRODUCT No. ASBF- _ _ _)

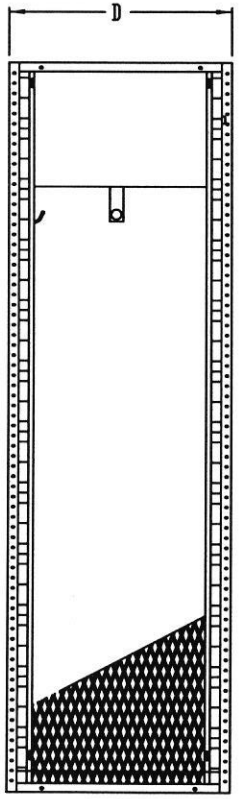

SIDE VIEW

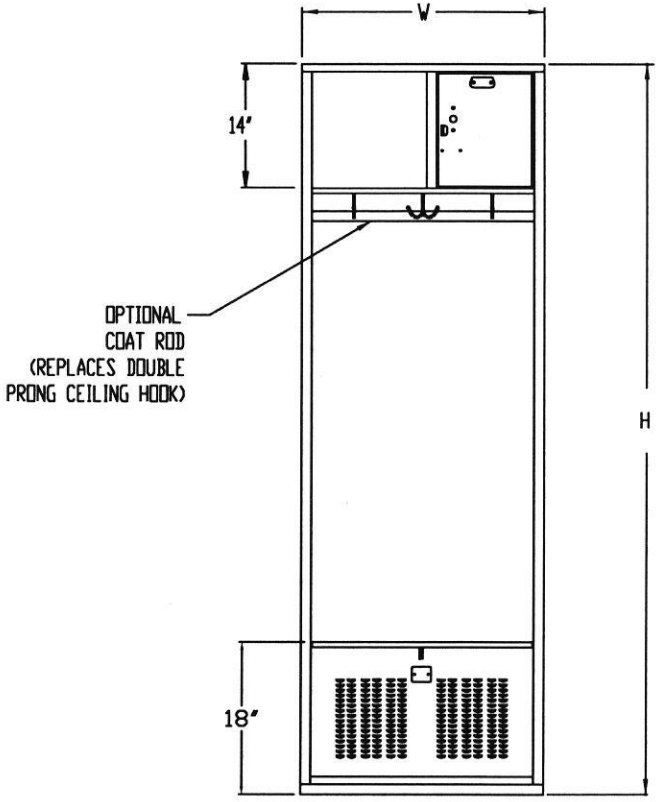

FRONT VIEW

LOCKER DETAILS :

EXTERIOR COLOR =
INTERIOR COLOR = SAME AS EXTERIOR
TOP = FLAT
LOCKS = FOOT LOCKER PAD LOCK ONLY
BOX DOOR = PAD LOCK OR BUILT-IN
DOOR VENTILATION = PLAIN
SIDE VENTILATION = 1/2" 13GA. FLT/EXP/MTL
BASE =
COAT ROD = 1" STAINLESS STEEL (OPTIONAL)
DOOR HINGE = 7 KNUCKLE, 13 GA. BUTT HINGE WELDED TO DOOR & RIVETED TO THE FRAME
SEAT HINGE = FULL LENGTH, STAKED PIANO HINGE WELDED TO SEAT & RIVETED TO FRAME

CONTRACTOR NOTE

ALL CONCRETE BASES SHOULD BE LEVEL AND TROWELED SMOOTH TO ASSURE PROPER INSTALLATION OF THE LOCKERS. ALL FLOORING MATERIAL ATTACHED TO THE FACE OF THE BASE SHOULD BE RECESSED AT LEAST 1/4" FROM THE TOP EDGE OF THE BASE. LOCKERS MUST BE ANCHORED TO WALL.

GAUGES

DOOR = 14 GA., C.R.S. BOX DOOR
SEAT = 14 GA., C.R.S. (REINFORCED)
FOOT LOCKER FRONT = 14 GA., C.R.S. SECURITY-PLUS VENTS
BASE = 14 GA., C.R.S.
TOP = 16 GA., C.R.S.
SHELF = 16 GA., GALVANNEAL
SIDES = 1/2" 13 GA. FLT/EXP/MTL, H.P.D.
BACKS = 18 GA., C.R.S.

Customer Order Number:	Customer:

SUPERIOR

THIS DRAWING AND THE INFORMATION ON IT IS THE CONFIDENTIAL PROPERTY OF LIST INDUSTRIES, INC. AND SHALL NOT BE COPIED OR DISCLOSED TO OTHERS WITHOUT WRITTEN PERMISSION. ONLY LIST INDUSTRIES RESERVES THE RIGHT TO ALTER ANY DESIGN. ANY UNAUTHORIZED MODIFICATIONS RELEASES LIST INDUSTRIES FROM ALL LIABILITIES.

TOLERANCES UNLESS SPECIFIED:
FRACTIONS: ±1/32 DECIMALS: ±.010 DEGREES: ±1°

Description:

Drawn By:	Checked By:	Date:	Scale:

Acad Number:	Sheet OF	Revision:

Drawing Number:

TRIP FINDER - November School Board Field Trip Approval Report *(Field Trips With Student Fees Over $100)*

Trip ID	Origin	Trip Date	Return Date	Date Requested	Cost	Trip Name	Trip Type	Acticity Type	#	Destination
6593	**Brentwood High**	04/16/2026	04/19/2026	09/26/2025	Over $100 PER STUDENT	Youth Legislature: BHS	ACADEMIC OVERNIGHT	9th-12th Grade	100	Doubletree Hotel Nashville
Notes/Fees	*Parents are responsible for transportation*									
5796	**Centennial HS - CTE Paid**	02/24/2026	02/27/2026	08/06/2025	Over $100 PER STUDENT	DECA State Career Development Conference	CTE OVERNIGHT	CTE - DECA	30	Chattanooga Convention Center
Notes/Fees	*Cost will be over $100 per student.*									
6891	**Centennial High**	11/07/2025	11/09/2025	10/22/2025	Over $100 No Driver	Model United Nations	ACADEMIC OVERNIGHT	Model UN	20	Embassy Suites Murfreesboro
Notes/Fees	*Cost per student: $400*									
7184	**Centennial HS Fine Arts Overnight**	01/08/2026	01/10/2026	11/05/2025	Over $100 PER STUDENT	MTSBOA Orchestra MidState	FINE ARTS OVERNIGHT	Concert	130	Stewart's Creek High School
Notes/Fees	*Name: MTSBOA Orchestra & Jazz Band MidState Conference. Location: Stewart's Creek High School, 301 Red Hawk Parkway, Smyrna TN 37167 Student Cost: approximately $300; Fundraising through WCODA and donations. Schools: Brentwood HS, Centennial HS, Fairview HS, Franklin HS, Indy HS, Nolensville HS, Page HS, Ravenwood HS, Summit HS, Brentwood MS, Fairview MS, Grassland MS, Heritage MS, Legacy MS, Mill Creek MS, Page MS, Spring Station MS, Sunset MS, Thompson's Station MS, Woodland MS, Hillsboro MS*									
7185	**Centennial HS Fine Arts Overnight**	01/15/2026	01/17/2026	11/05/2025	Over $100 PER STUDENT	Midstate Band	FINE ARTS OVERNIGHT	Concert	180	Siegel Middle School
Notes/Fees	*Name of Event: Midstate Band. January 15th 4:00 pm- January 17th 5:00 pm. Location: Siegel Middle and High School Charter buses will depart with all WCS students from Centennial HS on January 15 at 4 pm. Parents will pick students up at the conclusion of the concerts on Saturday January 17. $250 for lodging, registration, and transportation. Funds are raised through WCBDA, and donations. Approximate number of students: 180 Schools: Brentwood HS, Centennial HS, Fairview HS, Franklin HS, Indy HS, Nolensville HS, Page HS, Ravenwood HS, Summit HS, Brentwood MS, Fairview MS, Grassland MS, Heritage MS, Legacy MS, Mill Creek MS, Page MS, Spring Station MS, Sunset MS, Thompson's Station MS, Woodland MS, Hillsboro MS*									
6746	**Fairview High**	01/16/2026	01/17/2026	10/14/2025	Over $100 PER STUDENT	Tennessee ThesCon	FINE ARTS OVERNIGHT	Drama	33	MTSU
Notes/Fees	*over 100*									
6779	**Fairview High**	03/14/2027	03/18/2027	10/14/2025	Over $100 No Driver	FvHS New York Trip	FINE ARTS OVERNIGHT	Drama	20	Museum of Broadway
Notes/Fees	*over 100. Round trip flights to your destination (Flight prices are based on current market conditions and we will advise of any possible cost fluctuations when flights are confirmed). Professional tour manager with your group throughout the tour. Transportation from the airport to your hotel. Four nights Hotel accommodation in midtown Manhattan. 7 Day Unlimited MetroCard. Transportation from your hotel to the airport. Breakfast included at the hotel daily. 5 Lunches. 4 Dinners. Dinner at Ellen's Stardust Diner; Dinner at Havana Central; Dinner at John's Pizzeria; Dinner at Puglia in Little Italy. Midtown Manhattan Walking Tour. Admission to the Stage Door Tour at Radio City Music Hall. Admission to the 86th floor observatory at the Empire State Building. Admission to the Museum of Broadway. Admission to the Metropolitan Museum of Art. Central Park Walking Tour. Visit to the Apple Store/Plaza/Fifth Avenue. Three Broadway show ticket (rear mezzanine seating). Theatre or dance workshop (topic to be chosen). Free time for shopping at Rockefeller Center. Admission to the Museum of Modern Art (MoMA). Admission to RiseNY. Statue of Liberty / Ellis Island Ferry Ticket. Visit to the Wall Street Area. Visit to the 9/11 Memorial at the World Trade Center. Visit to the food court and shops at Brookfield Place overlooking the Hudson River. Walk on the Brooklyn Bridge. Visit to Chinatown & Little Italy. Visit to Little Island @Pier 55 in Hudson River Park. Visit to the Chelsea Market. Visit to the High Line Park. Gratuities for the bus driver. Gratuities for the tour manager. Trip delay and medical insurance coverage up to $100,000 per person. One free place in double occupancy for every 10 paying passengers. FREE website where travelers can register and pay online with no monthly fees. Price per student is currently $2575.*									
6700	**Franklin High**	01/16/2026	01/17/2026	10/02/2025	Over $100 PER STUDENT	FHS - ThesCon	FINE ARTS OVERNIGHT	Drama	21	MTSU
Notes/Fees	*Annual theatre trip to the Thespian Convention at MTSU. We will need to leave Friday morning on a bus and drop bags off at hotel near MTSU. We will then take the bus to MTSU for a series of workshops/competitions and events throughout the day before returning to the hotel for the night. There are more workshops/events throughout the day on Saturday and then we will return to FHS late Saturday night. Cost without fundraising will be around $200 per student (95 for registration + hotel accommodations). There are fundraisers planned to offset the cost.*									
6506	**Independence High**	03/29/2026	04/01/2026	09/19/2025	Over $100 PER STUDENT	HOSA State Leadership Conference	ACADEMIC OVERNIGHT	CTE - HOSA	50	Chattanooga Convention Center
Notes/Fees	*This number of students is an estimate. It will be dependent on our success or lack thereof in regionals. We can take a regular school bus or 2.*									

TRIP FINDER - November School Board Field Trip Approval Report *(Field Trips With Student Fees Over $100)*

Trip ID	Origin	Trip Date	Return Date	Date Requested	Cost	Trip Name	Trip Type	Acticity Type	#	Destination
6642	**Independence HS Fine Arts Overnight**	02/05/2026	02/09/2026	09/30/2025	Over $100 No Driver	Indy Band Game Day Live Nationals	FINE ARTS OVERNIGHT	Marching Band	33	Pop Century Resort
Notes/Fees	*Indy Band trip to Game Day Live Nations Competition in Disney World. The total cost for participating in Game Day Live and the Nationals Competition is $1400. Students will have the opportunity to participate in fundraisers to offset costs. Parents will be responsible for the transportation of their student to the event. The basic itinerary of the trip is as follows: Thursday: Travel Day; Friday: Rehearsal & Visit Parks; Saturday: Competition Day; Sunday: Competition Day; Monday Travel Day.*									
6785	**Independence HS - CTE Paid**	03/29/2026	04/01/2026	10/15/2025	Over $100 PER STUDENT	HOSA SLC	CTE OVERNIGHT	CTE - HOSA	55	Chattanooga Convention Center
Notes/Fees	*One teacher will drive separately and one chaperone will drive separately other than that all students and other teacher/chaperone will be on the bus*									
6751	**Independence HS Fine Arts**	01/16/2026	01/17/2026	10/14/2025	Over $100 PER STUDENT	Thespian Conference	FINE ARTS OVERNIGHT	9th-12th Grade	75	MTSU
Notes/Fees	*Will finalize number of students and vehicles after students sign up*									
4067	**Mill Creek MS Fine Arts Overnight**	01/15/2026	01/19/2026	02/21/2025	Over $100 PER STUDENT	Junior Theatre Festival	FINE ARTS OVERNIGHT	Drama	40	Cobb Galleria
Notes/Fees	*COST TO STUDENTS: UP TO $1500; NO BUS NEEDED. We will be using a charter bus for the trip. Trip Overview: Junior Theater Festival (JTF). The upcoming trip to the Junior Theater Festival (JTF) is set for January 15th 2026, departing promptly after school. We will need to leave by 3:00 PM to ensure timely arrival in Atlanta, GA. A Charter Bus will be utilized for transportation to and from Atlanta. The anticipated cost per student is between $1250 and $1500, depending on inflation. To help alleviate this cost for students, we will conduct fundraising activities. What is JTF? The Junior Theater Festival is recognized as the world's largest and most exciting celebration of young people performing musical theater. This event brings together student musical theater troupes from around the globe for a weekend filled with musical theater excitement. Each troupe will perform a fifteen-minute segment of a Broadway Junior show, which will be evaluated by a panel of musical theater experts. Is there instruction and/or performance involved in this trip? Yes, the festival includes both performance opportunities and educational components. In addition to performing, students will have access to workshops designed to enhance their skills, along with professional development sessions for teachers. What else will be taking place during the weekend? The festival weekend will feature a variety of activities, including a New Works Showcase for new musical adaptations, workshops for students and parents, and a grand finale concert headlined by Broadway's best performers. Additionally, students will have the opportunity to visit the Cobb Galleria, the Natural History Museum, and other attractions in and around Atlanta. Total cost of the trip: The total cost of the trip is projected to be between $1250 and $1500 per student. This cost includes JTF registration, transportation, lodging, meals, and access to the event venue. How will the trip be funded? To help cover the expenses, we will engage in various fundraising efforts aimed at offsetting the total cost for students. Lodging: Hotel accommodations will be arranged as part of the trip package, ensuring students have a comfortable place to stay during the festival. How will meals be provided? Meals will be included in the overall price of the trip, ensuring that students are provided with adequate nourishment throughout the festival weekend. Additional Information: This trip promises to be an enriching experience for students, combining performance, learning, and cultural exploration. It will allow them to gain invaluable insights into the world of musical theater while enjoying the vibrant atmosphere of Atlanta. We look forward to a memorable and educational journey at the Junior Theater Festival.*									
6468	**Nolensville High**	11/07/2025	11/09/2025	09/17/2025	Over $100 PER STUDENT	NHS Model United Nations	ACADEMIC OVERNIGHT	Model UN	45	Embassy Suites Murfreesboro
Notes/Fees	*NO BUS OR DRIVER NEEDED. Students provide their own transportation*									
6846	**Page High**	01/16/2026	01/17/2026	10/21/2025	Over $100 PER STUDENT	ThesCon	FINE ARTS OVERNIGHT	Drama	38	MTSU
Notes/Fees	*Leave from PHS to Hyatt in Murfreesboro. Unload luggage. From Hyatt to MTSU. Late Friday transport from MTSU to Hyatt. Next morning from Hyatt to MTSU. End of night from MTSU to PHS.*									
6917	**Page HS - CTE Paid**	03/22/2026	03/25/2026	10/23/2025	Over $100 PER STUDENT	State FFA Convention	CTE OVERNIGHT	CTE - FFA	30	Gatlinburg Convention Center
Notes/Fees	*DRIVER AND BUS NEEDED. Will not have exact number of students travelling until March 1st. School Nurse will be notified.*									
7054	**Page High**	03/04/2026	03/07/2026	10/30/2025	Over $100 PER STUDENT	South Eastern Theatre Conference	FINE ARTS OVERNIGHT	Drama	20	University of Tennessee Chattanooga
Notes/Fees	*Depart from Page High to UTC on Wednesday. Bus returns home. Bus picks up at UTC on Saturday to return to Page High on Saturday.*									
6952	**Ravenwood High**	01/16/2026	01/17/2026	10/27/2025	Over $100 PER STUDENT	Thespian Honor Society Thescon Conference	FINE ARTS OVERNIGHT	Drama	50	MTSU
Notes/Fees	*Thespian Honor Society State Conference: Students will be participating in workshops/masterclasses, interacting with college & university Fine Arts departments, and will be watching high school theater performances from schools across the state. Students will leave school on Friday, January 16th @ 1:00pm and will arrive at MTSU for the first day of the conference. Bus should return @ 10:30pm to MTSU to drive us to our hotel. Bus should return the following morning @ 8:30am to drive us to MTSU for the second day of the event. Bus should return @ 9:30pm that evening to drive us back to Ravenwood. We will be staying at the Mainstay Suites Murfreesboro: 130 John R. Rice Blvd. Murfreesboro, TN 37129. Additional information available upon request.*									

TRIP FINDER - November School Board Field Trip Approval Report *(Field Trips With Student Fees Over $100)*

Trip ID	Origin	Trip Date	Return Date	Date Requested	Cost	Trip Name	Trip Type	Acticity Type	#	Destination
6161	**Ravenwood HS - CTE Paid**	02/24/2026	02/27/2026	08/19/2025	Over $100 No Driver	DECA State	CTE OVERNIGHT	CTE - DECA	200	Chattanooga Convention Center
Notes/Fees	*Cost not to exceed $500*									
6162	**Ravenwood HS - CTE Paid**	04/24/2026	04/29/2026	08/19/2025	Over $100 No Driver	DECA ICDC	CTE OVERNIGHT	CTE - DECA	120	Atlanta Convention Center
Notes/Fees	*Cost not to exceed $1500*									
6845	**Summit High**	01/16/2026	01/17/2026	10/21/2025	Over $100 PER STUDENT	Thespian Conference	FINE ARTS OVERNIGHT	Drama	30	MTSU
Notes/Fees	*When we get to Murfreesboro, we will need to be dropped off at our hotel (probably Comfort Inn; I will email confirmation when I get it) and then taken to MTSU. That evening, we'll need to be taken back to our hotel from the MTSU campus. The following morning, please pick up at the hotel to return to the campus. We will return home that evening from the MTSU campus.*									
6872	**Summit HS - CTE Paid**	02/24/2026	02/27/2026	10/22/2025	Over $100 PER STUDENT	SHS DECA State Competition	CTE OVERNIGHT	CTE - DECA	60	Chattanooga Convention Center
Notes/Fees	*We will have between 50-60 students on this trip. We will leave after school on Tuesday, February 24. We will return Friday, February 27 by 2:00 PM. We should be picked up in Chattanooga between 10 AM and 11 AM. Cost per student will be over $100 due to competition registration, hotel cost, and food cost. We will need 2 buses to accommodate students, chaperones, and luggage for everyone.*									

Facilities & Construction
1320 West Main Street, Suite 202
Franklin, TN 37064
Tele. (615) 472-4041
Fax (615) 472-5622

MEMORANDUM

DATE: November 13, 2025

TO: School Board Members

FROM: Brian King, Assistant Superintendent for Operations

RE: 2026-2030 Capital Plan

Attached is the 5-Year Capital Plan for your review. The plan is divided into six categories:

1. Real Estate Acquisitions
2. New School Building Construction
3. Additions/Major Renovations
4. Maintenance – Asphalt Pavement Resurfacing, Roof Replacements and HVAC Upgrades at Various Schools on a Yearly Basis
5. Safety Yearly Requests – both Physical and Cyber
6. Transportation – Regular and Special Need Buses.

In preparation of this plan, we have looked at our current needs and what we are forecasting in our growth. Our zoning personnel continue to assess our needs at each school by looking at current enrollment and trends. They also monitor growth by monitoring new developments in our county.

Some highlights of this plan are:

- Reduced the current year's capital request from $143,325,00 in last year's plan to $44,635,000
- Reduced overall 5-year capital plan from $878,984,664 to $662,204,900
- Reduced the number of new construction projects based on growth stabilization.

- There are additional major renovations added to our 5-year plan, focusing on schools built between 1990-1995.

- Maintenance is requesting $12 million to replace the outdated ballast-style lighting systems at our high school athletic fields with LED lighting.

- The physical and cybersecurity requests include phase 3 of our access control and intercom / alert system.

- Transportation needs are included in the plan for the replacement of retired buses within our fleet. Overall, we are reducing our general education inventory with a slight increase in our special education fleet.

Attached is a copy of the current proposed plan for your review as well as a copy of last year's approved plan for comparison.

Staff recommend approval of the attached 5-Year Capital Plan.

2026-2030: 5 Year Capital Outlay Plan

11/14/2025

Project	ITF Needed 2025-26	ITF Needed 2026-27	ITF Needed 2027-28	ITF Needed 2028-29	ITF Needed 2029-30	Additional Years	Total Amount Intent to Fund	Projected Completion Date
REAL ESTATE ACQUISITIONS FOR FUTURE SCHOOLS								
Land Purchase Elementary / Middle / High		3,000,000					**3,000,000**	
NEW BUILDINGS AND ADDITIONS								
Spring Station Middle School Performing Arts Center	1,000,000	2,500,000	2,500,000				**6,000,000**	Fall 2029
Elementary School Northeast (McFarlin Road Area)		3,000,000	32,000,000	32,000,000			**67,000,000**	Fall 2030
Nolensville High School Addition (22-Classroom Addition)		2,000,000	3,000,000	13,000,000			**18,000,000**	Fall 2030
Middle School (Split Log Property)		17,000,000	43,000,000	43,000,000			**103,000,000**	Fall 2030
Centennial High School Addition (22-Classroom Addition)			2,000,000	3,000,000	13,000,000		**18,000,000**	Fall 2031
Elementary School West (Fairview)			3,000,000	32,000,000	32,000,000		**67,000,000**	Fall 2031
Middle School (Cox Road)		4,000,000	2,000,000	44,500,000	44,500,000		**95,000,000**	Fall 2031
Elementary School South (Spring Hill/Thompson's Station)			3,000,000	32,000,000	32,000,000		**67,000,000**	Fall 2031
SUBTOTAL NEW SCHOOL BUILDING CONSTRUCTION/ADDITIONS AND LAND	**$ 1,000,000**	**$ 31,500,000**	**$ 90,500,000**	**$ 199,500,000**	**$ 121,500,000**		**$ 444,000,000**	
MAJOR RENOVATIONS								
Hillsboro K8 Renovation (Constructed 1981)	1,800,000	1,800,000					**3,600,000**	Fall 2028
Grassland Middle School Renovation (Constructed 1986)	4,000,000	2,000,000					**6,000,000**	Fall 2028
Bethesda Elementary Renovation (Constructed 1990)	500,000	1,500,000	1,500,000	1,500,000			**5,000,000**	Fall 2030
Crockett Elementary Renovation (Constructed 1990)	750,000	1,750,000	1,750,000	1,750,000			**6,000,000**	Fall 2030
Walnut Grove Renovation (Constructed 1990)		750,000	1,750,000	1,750,000	1,750,000		**6,000,000**	Fall 2031
Trinity Elementary Renovation (Constructed 1990)		750,000	1,750,000	1,750,000	1,750,000		**6,000,000**	Fall 2031
Grassland Elementary Renovation (Constructed 1992)		750,000	1,750,000	1,750,000	1,750,000		**6,000,000**	Fall 2031
Lipscomb Elementary Renovation (Constructed 1992)			750,000	1,750,000	1,500,000	1,500,000	**5,500,000**	Fall 2032
College Grove Elementary Renovation (Constructed 1993)			500,000	1,500,000	1,250,000	1,250,000	**4,500,000**	Fall 2032
Oak View Elementary Renovation (Constructed 1993)			500,000	1,500,000	1,500,000	1,500,000	**5,000,000**	Fall 2032
Woodland Middle Renovation (Constructed 1993)				1,000,000	2,500,000	5,000,000	**8,500,000**	Fall 2033
Edmondson Elementary Renovation (Constructed 1995)				750,000	1,750,000	3,500,000	**6,000,000**	Fall 2033
Hunter's Bend Elementary Renovation (Constructed 1995)				750,000	1,750,000	3,000,000	**5,500,000**	Fall 2033
SUBTOTAL MAJOR RENOVATIONS	**$ 7,050,000**	**$ 9,300,000**	**$ 10,250,000**	**$ 15,750,000**	**$ 15,500,000**	**$ 15,750,000**	**$ 73,600,000**	
MAINTENANCE YEARLY REQUESTS FOR MAJOR PROJECTS								
Projected Major Capital Projects (Asphalt Parking Lots/Roadways/Tennis Courts/Tracks/Turf) [SStMS, FvMS, PES, BHS, NHS]	2,813,000	3,492,000	2,040,000	1,463,000	3,715,000		**13,523,000**	TBD
Projected Major Capital Projects (Roofs), GES, AES, Operations Support/Book	2,695,000	3,368,000	4,955,000	6,610,000	2,800,000		**20,428,000**	TBD
WWTP Upgrades		1,200,000	500,000	800,000			**2,500,000**	TBD
HVAC (Replacements) WGES, CGES, GES, IHS		2,443,000	1,390,000	2,530,000	3,790,000		**10,153,000**	TBD
Sports Field LED Upgrades (All 9 High Schools)	12,000,000		3,000,000				**15,000,000**	TBD
SUBTOTAL MAINTENANCE YEARLY REQUESTS FOR MAJOR PROJECTS	**$ 17,508,000**	**$ 10,503,000**	**$ 11,885,000**	**$ 11,403,000**	**$ 10,305,000**		**$ 61,604,000**	
SAFETY YEARLY REQUESTS FOR MAJOR PROJECTS								
Physical and Cyber Security/Network	15,893,000	14,194,400	12,149,500	13,750,000	13,750,000		**69,736,900**	TBD
SUBTOTAL SAFETY YEARLY REQUESTS	**$ 15,893,000**	**$ 14,194,400**	**$ 12,149,500**	**$ 13,750,000**	**$ 13,750,000**		**$ 69,736,900**	
TOTAL CAPITAL NEEDS FOR FACILITIES	**$ 41,451,000**	**$ 65,497,400**	**$ 124,784,500**	**$ 240,403,000**	**$ 161,055,000**	**$ 15,750,000**	**$ 648,940,900**	
General Ed Bus	8	10	10	10	10		48	
Special Bus	11	5	5	5	5		31	Funded usually through Fund Balance
***** PROJECTED ANNUAL CAPITAL REQUESTS FOR TRANSPORTATION**	**$ 3,184,000**	**$ 2,520,000**	**$ 2,520,000**	**$ 2,520,000**	**$ 2,520,000**		**$ 13,264,000**	Yearly
Replacement Cost per Bus (GenEd $167,000 / Specials $168,000)								
GRAND TOTAL CAPITAL PLAN	**$ 44,635,000**	**$ 68,017,400**	**$ 127,304,500**	**$ 242,923,000**	**$ 163,575,000**	**$ 15,750,000**	**$ 662,204,900**	

Individual Project Cost Does Not Include Cost of Land.

Buildout Cost Includes Design, Engineering, Environmental Studies, Tap Fees, Utility Grades, Permitting, Infrastructure Improvements, Site Work, Building Construction, Furniture, Fixtures, Library Books, Technology, Textbooks & Security Measures.

2026-2027 PROPOSED WCS STUDENT SCHOOL CALENDAR 1st Semester = 83 Instructional Days		2nd Semester = 94 Instructional Days
Day	**Date**	**Definition**
Monday **(Students ½ Day)**	August 10	Start of School (1st – 12th Grades)
Tuesday	August 11	First Full Day of School (1st – 12th Grades)
Monday	August 17	First Full Day for Pre-Kindergarten, Early Childhood and Kindergarten Students
Monday **(No School)**	September 7	Labor Day **(System Closed)**
Thursday	September 17	Constitution Day Observed (Students in School)
Monday – Friday	September 21 – November 6	Parent Teacher Conference Window
Friday	October 9	End of First Quarter Grading Period (44 Grading Days)
Monday	October 12	Columbus Day – Students on Fall Break
Monday – Friday **(No School)**	October 12 – 16	Fall Break **(System Closed Oct 14-16)**
Tuesday **(No Students)**	November 3	Election Day
Wednesday	November 11	Veterans' Day (Students in School)
Monday – Friday **(No School)**	November 23 – 27	Thanksgiving Holiday **(System Closed)**
Friday **(Students ½ Day)**	December 18	End of First Semester (39 Grading Days)
Monday - Monday **(No School)**	December 21 – January 4	Winter Break
Tuesday	January 5	Students Full Day – Second Semester Begins
Monday **(No School)**	January 18	Martin Luther King, Jr. Day **(System Closed)**
Friday - Monday **(No Students)**	February 12 - 15	Mid-Winter Break; Presidents' Day
Friday	March 12	End of Third Quarter Grading Period (46 Grading Days)
Monday – Friday **(No School)**	March 15 – 19	Spring Break **(System Closed)**
Friday **(No School)**	March 26	Spring Holiday **(System Closed)**
Thursday **(Students ½ Day)**	May 27	Last Day for Students – End of Second Semester (48 Grading Days)
Thursday – Sunday	May 27 – 30	Graduation Window

**See next page for more explanation.*

Specific testing dates/windows can be found on the WCS Assessment Page as they become available.

K-5 Early Release Dates (11 dates, 113 min.)

First Semester	Second Semester
August 26	January 13
September 16	January 27
September 30	February 10
October 28	February 24
November 11	March 10
December 9	

6-12 Late Start Dates (27 dates, 45 min.)

First Semester	Second Semester
August 18	January 5
August 24	January 11
August 31	January 19
September 8	January 25
September 14	February 1
September 21	February 8
September 28	February 22
October 5	March 1
October 19	March 8
October 26	March 22
November 2	March 29
November 9	April 5
November 16	
November 30	
December 7	

Inclement Weather Days

Up to ten (10) inclement weather days are accumulated in the school calendar through extended work (stockpile) days and will not be made up. If more than ten (10) days are missed due to weather related conditions, the Calendar Committee will make a recommendation to the Superintendent of Schools from the following days: Mid-Winter Break; Second Semester Professional Development Day; Spring Holiday; Spring Break Days (Monday, then Tuesday, then Wednesday); Additional days at the end of the school year calendar.

No Students – Students do not report to school. Teachers will report for an Admin or PD Day.
No School – Students and teachers do not report. Twelve-month employees report to work on this day.
System Closed – All schools and the district offices are closed.

Approval Date: _____

2026-2027 PROPOSED WCS STAFF SCHOOL CALENDAR 1st Semester = 83 Instructional Days		2nd Semester = 94 Instructional Days
Day	**Date**	**Definition**
Friday **(No School)**	July 3	Independence Day Observed **(System Closed)**
Wednesday – Thursday **(No Students)**	July 29 – 30	New Teacher Induction
Monday **(No Students)**	August 3	Administrative Day (All Teachers Report)
Tuesday **(No Students)**	August 4	*District-Wide Professional Development Day*
Wednesday **(No Students)**	August 5	*Site-Based Professional Development Day*
Thursday **(No Students)**	August 6	*Site-Based Professional Development Day*
Friday **(No Students)**	August 7	Administrative Day – Teacher Prep Day (Flex)*
Monday **(Students ½ Day)**	August 10	Start of School (1st – 12th Grades)
Tuesday	August 11	First Full Day of School (1st – 12th Grades)
Monday	August 17	First Full Day for Pre-Kindergarten, Early Childhood and Kindergarten Students
Monday **(No School)**	September 7	Labor Day **(System Closed)**
Thursday	September 17	Constitution Day Observed (Students in School)
Monday - Friday	September 21 – November 6	Parent Teacher Conference Window*
Friday	October 9	End of First Quarter Grading Period (44 Grading Days)
Monday **(No Students)**	October 12	Columbus Day; Parent/Teacher Conference Day (Flex)*
Tuesday **(No Students)**	October 13	*District-Wide Professional Development Day (Flex)**
Wednesday – Friday **(No School)**	October 14 – 16	Fall Break **(System Closed)**
Tuesday **(No Students)**	November 3	*Site-Based Professional Development Day*; Election Day
Wednesday	November 11	Veterans' Day (Students in School)
Monday – Friday **(No School)**	November 23 – 27	Thanksgiving Holiday **(System Closed)**
Friday **(Students ½ Day)**	December 18	End of First Semester (39 Grading Days)
Monday - Friday **(No School)**	December 21 – January 1	**Winter Break & New Year's Day (System Closed)**
Monday **(No Students)**	January 4	Administrative Day – Teacher Prep Day (Flex)*
Tuesday	January 5	Students Full Day – Second Semester Begins
Monday **(No School)**	January 18	Martin Luther King, Jr. Day **(System Closed)**
Friday **(No Students)**	February 12	*District-Wide Professional Development Day*
Monday **(No School)**	February 15	Mid-Winter Break; Presidents' Day
Friday	March 12	End of Third Quarter Grading Period (46 Grading Days)
Monday – Friday **(No School)**	March 15 – 19	Spring Break **(System Closed)**
Friday **(No School)**	March 26	Spring Holiday **(System Closed)**
Thursday **(Students ½ Day)**	May 27	Last Day for Students – End of Second Semester (48 Grading Days)
Thursday – Sunday	May 27 – 30	Graduation Window
Friday	May 28	Administrative Day (All Teachers Report)
Monday	May 31	Memorial Day **(System Closed)**
Friday	June 18	Juneteenth Observed

*See next page for more explanation.

Specific testing dates/windows can be found on the WCS Assessment Page as they become available.

Professional Development Days

Six (6) days below are in this calendar for professional development. Two (2) days must be scheduled by each teacher outside the scheduled school calendar. All professional development days are in person unless otherwise noted and shall be equivalent to not less than six (6) hours of planned activities per day.

August 4	-	District-Wide
August 5	-	Site-Based
August 6	-	Site-Based
October 13	-	District-Wide
November 3	-	Site-Based
February 12	-	District-Wide

***Administrative Day – Teacher Prep Dates (Flex) August 7 and January 4**

Teachers will work six (6) hours preparing their classrooms and instructional materials for the start of each semester. The hours may be worked on the date indicated or any time before the first day of the semester. The requirements for the start of each semester haven't changed, but when and where classroom teachers complete the start of semester requirements are flexible. Each principal will share expectations on how teachers log the required work hours and, and teachers will clock-in on the scheduled work date to document these hours for payroll purposes.

***Parent Teacher Conferences Dates (Flex)**

Parent Teacher Conferences will be scheduled for a total of 6 hours before or after school between September 21-November 6. This allows flexibility for teachers to complete conferences three weeks before and after the calendar date of October 12th. Conferences may be conducted in person, via Zoom or by phone. Conference hours shall be documented and approved by the Superintendent of Schools or Designee. Teachers will clock-in on October 12th to document these hours for payroll purposes, but they are not expected to do conferences on October 12th.

***District-Wide PD Date (Flex)**

October 13th is a District-Wide PD Flex Date for a total of six (6) hours of professional development as follows: two (2) hours of required back-to-school videos shall be completed before the first student day of school; two (2) hours of face-to-face suicide prevention PD shall be completed before the end of the first semester (each principal schedules dates & times for their schools); and two (2) hours of asynchronous Instructional Technology PD shall be completed before the end of the first semester as assigned by the TLA department (released on or before October 13th).

Inclement Weather Days

Up to ten (10) inclement weather days are accumulated in the school calendar through extended work (stockpile) days and will not be made up. If more than ten (10) days are missed due to weather-related conditions, the Calendar Committee recommends to the Superintendent of Schools to use the following dates in order: Mid-Winter Break; Second Semester Professional Development Day; Spring Holiday; Spring Break Days (Monday, then Tuesday, then Wednesday); Additional days at the end of the school year calendar.

No Students – Students do not report to school. Teachers will report for an Admin or PD Day.
No School – Students and teachers do not report. Twelve-month employees report to work on this day.
System Closed – All schools and the district offices are closed.

K-5 Early Release Dates (11 dates, 113 min.)

First Semester	Second Semester
August 26	January 13
September 16	January 27
September 30	February 10
October 28	February 24
November 11	March 10
December 9	

6-12 Late Start Dates (27 dates, 45 min.)

First Semester	Second Semester
August 18	January 5
August 24	January 11
August 31	January 19
September 8	January 25
September 14	February 1
September 21	February 8
September 28	February 22
October 5	March 1
October 19	March 8
October 26	March 22
November 2	March 29
November 9	April 5
November 16	
November 30	
December 7	

Approval Date: _____

2027-2028 **PROPOSED** WCS **STUDENT** SCHOOL CALENDAR 1st Semester = 83 Instructional Days		2nd Semester = 94 Instructional Days
Day	**Date**	**Definition**
Monday **(Students ½ Day)**	August 9	Start of School (1st – 12th Grades)
Monday **(No School)**	September 6	Labor Day **(System Closed)**
Monday – Friday **(No Students)**	October 11 – 15	Fall Break **(System Closed Oct 13-15)**
Monday **(No Students)**	November 1	*Site-Based Professional Development Day*
Monday – Friday **(No School)**	November 22 – 26	Thanksgiving Holiday **(System Closed)**
Friday **(Students ½ Day)**	December 17	End of First Semester
Monday - Friday **(No Students)**	December 20 – December 31	Winter Break **(System Closed Dec 21-31)**
Monday **(Students Full Day)**	January 3	Second Semester Begins
Monday **(No School)**	January 17	Martin Luther King, Jr. Day **(System Closed)**
Friday-Monday **(No School)**	February 18-21	Mid-Winter Break
Tuesday **(No School)**	March 7	Presidential Primary
Monday – Friday **(No School)**	March 13 – 17	Spring Break **(System Closed)**
Friday **(No School)**	April 14	Spring Holiday **(System Closed)**
Thursday **(Students ½ Day)**	May 25	Last Day for Students – End of Second Semester
Thursday – Sunday	May 25 – 28	Graduation Window

Specific testing dates/windows can be found on the WCS Assessment Page as they become available.

Additional details for this school calendar will be approved by the WCS School Board and released by February 2026.

Approval Date: _____

2027-2028 PROPOSED WCS STAFF SCHOOL CALENDAR 1st Semester = 83 Instructional Days 2nd Semester = 94 Instructional Days		
Day	**Date**	**Definition**
Monday **(No Students)**	August 2	Administrative Day (All Teachers Return)
Tuesday **(No Students)**	August 3	*District- Wide Professional Development Day*
Wednesday **(No Students)**	August 4	*Site-Based Professional Development Day*
Thursday **(No Students)**	August 5	*Site-Based Professional Development Day*
Friday **(No Students)**	August 6	Administrative Day – Teacher Prep Day (Flex)
Monday **(Students ½ Day)**	August 9	Start of School
Monday **(No School)**	September 6	Labor Day **(System Closed)**
Monday **(No Students)**	October 11	Columbus Day; Parent/Teacher Conference Day (Flex)
Tuesday **(No Students)**	October 12	*District-Wide Professional Development Day (Flex)*
Wednesday – Friday **(No School)**	October 14 – 16	Fall Break **(System Closed)**
Monday **(No Students)**	November 1	*Site-Based Professional Development Day*
Monday – Friday **(No School)**	November 22 – 26	Thanksgiving Holiday **(System Closed)**
Friday **(Students ½ Day)**	December 17	End of First Semester
Monday **(No Students)**	December 20	Administrative Day – Teacher Prep Day (Flex)
Tuesday - Friday **(No School)**	December 21 – December 31	**Winter Break**
Monday **(Students Full Day)**	January 3	Second Semester Begins
Monday **(No School)**	January 17	Martin Luther King, Jr. Day **(System Closed)**
Friday **(No Students)**	February 18	*District-Wide Professional Development Day*
Monday **(No School)**	February 21	Mid-Winter Break; Presidents' Day
Tuesday **(No School)**	March 7	Presidential Primary
Monday – Friday **(No School)**	March 13 – 17	Spring Break **(System Closed)**
Friday **(No School)**	April 14	Spring Holiday **(System Closed)**
Thursday **(Students ½ Day)**	May 25	Last Day for Students – End of Second Semester
Thursday – Sunday	May 25 – 28	Graduation Window
Friday	May 26	Administrative Day (All Teachers Report)

Specific testing dates/windows can be found on the WCS Assessment Page as they become available.

Additional details for this school calendar will be approved by the WCS School Board and released by February 2026.

Approval Date: _____

POLICY REVIEW OR CREATION REQUEST

This form will be completed for all new policies and all recommendations for revisions to or deletions of policies of the Williamson County Board of Education. Attach any information which would be helpful to understand the proposed changes or actions.

Recommended by: Staff X General Counsel ☐ Board Member

Date Submitted to General Counsel: _10/1/2025_____

Recommendation: add ☐, revise X, or delete ☐ the following Policy number(s) and title(s):

Policy 3.210 Naming Facilities

Brief summary of the proposed addition or changes:

Update policy to include process of naming buildings, rooms, internal spaces, landscape features, courts, athletic fields, open spaces and all other areas owned, operated or controlled by the WCBOE.

Staff analysis of the proposed addition or changes in terms of the following:
Legal implications; educational benefits; impact on the staff at the building level; impact on staff at the district level; immediate and future changes in numbers of assignments of personnel; immediate and future budgetary impact.

Recommend approval.

Leigh Webb, Brian King and Juli Oyer	**10/1/25**
Name of Individual Submitting Policy for Review	**Date**

Williamson County Board of Education

Monitoring:	Descriptor Term:	Descriptor Code:	Issued Date:
Review: Annually, in October	**Naming Facilities or Other School Grounds**	**3.210**	**03/21/22**
		Rescinds: **3.210**	Issued: **02/18/19**

The naming of school buildings, major portions of buildings, or school grounds is the responsibility of the Williamson County Board of Education and applies to buildings, rooms, internal spaces, landscape features, courts, athletic fields, open spaces, and all other areas owned, operated or controlled by the Williamson County Board of Education

The process for selecting a name for a new school ***building*** and for renaming a school ***building*** shall be as follows:

1. The Superintendent shall appoint a naming committee composed of Board members, county commissioners, and WCS staff members.

2. Schools shall not be named after, commercial developments, or residential developments. Schools may be named for the area or community in which the school is located even if the area or community is named after a family.

3. If a school is named for an individual, then a school will be named according to the following naming criteria:

    a. The individual played a critical role or contributed to society in ways that supported the success and well-being of the individuals who lived in Williamson County, Tennessee, the State of Tennessee or the United States, now and in the future.
    b. The individual's principal legacy (i.e. the key activity, advocacy or accomplishment for which the individual is most known) aligns with or reflects the WCS mission, vision, core values and beliefs.
    c. The individual has been deceased for ten (10) or more years.
    d. No building may bear the name of an individual convicted of a felony.

4. Community input shall be solicited through a variety of appropriate methods.

5. The naming committee shall review and consider all proposed names submitted by the community.

6. The naming committee shall submit a one-page summary, which includes a list of two or three names and the justifications of the recommendation for each of the three names to the Superintendent, who will present the summary to the Board for consideration. The naming committee may rank the names presented to the Board if a clear consensus exists. The Superintendent shall provide the Board with the summary prior to the work session in which the Board will be discussing the three names presented by the naming committee.

7. The Board shall make the final selection of the name.

The process for naming of a portion of school facilities or other school grounds or renaming of a portion of a school or other school grounds shall be as follows:

At the recommendation of the Superintendent and the Leadership Team, the Board may approve naming of portions of facilities and grounds as a recognition of significant contribution to the school district. Due regard should be taken as the role the names of buildings and spaces contribute to the school district's sense of identity, as well as their role in assisting staff, students, and visitors to orient themselves within a campus.

A. Honorary Naming of an Individual without financial contribution is recognition of a significant contribution to the school district that the district wishes to honor.

The Board will apply the following guidelines in considering the recommendation of any individual's name proposed;

1. ***The individual has had direct, substantial, and active association with the district and has exemplified the district mission. Selection may also be based on the individual's record of scholarship, creativity, leadership, humanitarian service, or public service. Facilities may also be named to recognize organizations, individuals, geographical or historical features, and programs which have had significant impact in the life of the district.***

2. ***Recommendations must provide evidence of significant importance to the district and must outline the justifications for the name being suggested. Naming for such contributions is at the district's discretion and in support of its mission.***

3. ***The Superintendent and the Board will evaluate the proposed name against the following criteria:***

   a. Nominee has had a significant, long-term relationship with Williamson County Schools.
   b. Nominee, if a former Williamson County Schools employee, will have been retired or separated from district employment for a minimum of three years.
   c. Nominee has widespread support from colleagues, parents/guardians, and students.
   d. Nominee has achieved local, regional, or national recognition for achievements.
   e. Nominee has held local, regional, or national leadership roles in the field of expertise and is no longer active in their career.

B. Honorary Naming Through Financial Contribution

Honorary naming through financial contribution is recognition for financial contributions, be it in the way of donation, bequest, sponsorship or other commercial transactions. Due regard should be taken to consider balance between the commercial considerations and the role the names of

buildings and spaces contribute to the school district's sense of identity, as well as their role in assisting staff, students, and visitors to orient themselves within a campus.

The Board will apply the following guidelines in considering the recommendation of any entity proposed;

1. *Monetary valuations may be assigned to proposed naming rights on a case-by-case basis to aid with making decisions about granting naming rights.*

2. *The monetary valuation for the naming of a school or media center/library, theaters, athletic facilities, and other spaces will be decided by the Superintendent. Each case should take into account market comparisons for naming rights for which professional advice may be sought. Application of this policy may result in a portion of a school facility or other school grounds named for an individual or a company.*

3. *The granting of naming rights must always be consistent with the school district's mission or vision. The long-term effects of the naming rights must be considered. Each granting of naming rights is bound by a written agreement.*

Specific Naming Agreement Through Financial Contribution

1. *The school district recognizes that circumstances exist when the district might enter into an agreement for the specific naming of a facility or space in exchange for a specific financial or other contribution to the district.*

2. *Transferability, renewability, and limits:*
   a. *Transferability or renewability must be included in the written agreement. If not specifically identified in the agreement naming rights are not transferable or renewable.*
   b. *The district's right to use the name and other brand elements of the named party are permitted by express agreement with the named party.*
   c. *The named party has no decision-making rights as to the purpose or improvement of the facility or space unless specifically provided in the written agreement between the parties. The district will not agree to any conditions in an agreement that do not align with the district's mission and purpose, statutory obligation, or the local authority of the Board.*

Renaming and Revocation

The Board reserves the right to rename any named asset of the district. The Board reserves the right to revoke naming if for any reason it presents risk or harm to the reputation of the school district, or if the intent of the gift or terms of sponsorship associated with the naming cannot be fulfilled.

POLICY REVIEW OR CREATION REQUEST

This form will be completed for all new policies and all recommendations for revisions to or deletions of policies of the Williamson County Board of Education. Attach any information which would be helpful to understand the proposed changes or actions.

Recommended by: Staff ☐ General Counsel ☐ Board Member X _ Claire Reeves__

Date Submitted to General Counsel:
_9/23/25_____

Recommendation: add ☐, revise X, or delete ☐ the following Policy number(s) and title(s):

Report Cards and Grading Systems 4.600

Brief summary of the proposed addition or changes:

I think this policy needs to be updated to include the details of WCS GPA recalculation for transfer students, rather than leaving it as SOP. I will defer to Dr. Leigh Webb for the language to include to adequately describe the recalculation and the appeals process.

Brief justification of why additions or changes needed or required:

We have a report card and grading policy. The GPA recalculation for transfer students and corresponding appeals process should be spelled out in this policy to remove confusion amongst students/families and provide policy support to administrators and school staff.

Staff analysis of the proposed addition or changes in terms of the following:
Legal implications; educational benefits; impact on the staff at the building level; impact on staff at the district level; immediate and future changes in numbers of assignments of personnel; immediate and future budgetary impact.

Claire Reeves **9/23/25**

Name of Individual Submitting Policy for Review **Date**

Williamson County Board of Education

Monitoring:	Descriptor Term:	Descriptor Code:	Issued Date:
Review: Annually, in November	**Report Cards and Grading Systems**	**4.600**	**08/18/25**
		Rescinds: **4.600**	Issued: **08/19/24**

REPORT CARDS

The Superintendent shall develop an administrative procedure to establish a system of grading and assessment for evaluating and reporting student progress in conjunction with Tennessee academic standards for grades K-12.

The report cards shall indicate the information necessary to communicate effectively with the parents concerning their child's academic progress, conduct, and attendance. For students in grades kindergarten through eight (K-8), the student's score on the most recently administered universal reading screener shall also be provided on or with the report card along with the results of a dyslexia screener, if applicable.[1]

When a student's academic performance or behavior noticeably or suddenly changes, the teacher shall promptly inform the parents, maintain a record of the contact, and make an effort to have a conference with the parent. Parents will receive interim progress reports or other notification whenever a significant change in performance occurs or whenever a student is failing.

Report cards communicating student academic progress or status (grades) and attendance will be provided to parents on a regular basis (9 weeks).

Teachers may use supplemental reports to communicate additional progress as appropriate.

K-1 STANDARDS-BASED GRADING SCALE

The student consistently demonstrates understanding and application of the standard.

The student is making progress toward the standard.

The student is not making progress toward the standard

GRADES 2- 12 NUMERICAL GRADING SCALE:[2]

Grade	Grade Range
A	90 - 100
B	80 - 89
C	70 - 79
D	60 - 69
F	0 - 59

I Incomplete (must be removed during the next grading period)
P/F Credit by Examination

This grading system shall be uniform throughout the school district for each grade.

Numerical grades may be used for tests and other daily or weekly work that is readily quantifiable and shall be used on report cards. Only LETTER GRADES (A, B, C, etc.) will be used on high school transcripts. No plus (+) or minus (-) notations will be used on high school transcripts.

WEIGHTED GRADES

Advanced coursework grades shall be weighted with additional percentage points to calculate the semester average. Depending on the course taken, the following percentage points shall be assigned:

- Honors Courses and Pre-AP courses, including middle school courses taught at high school honors level, shall include the addition of three (3) percentage points to the grades used to calculate the semester average;
- Local and Statewide Dual Credit, Capstone Industry Certification Aligned shall include the addition of four (4) percentage points to the grade used to calculate the semester average; and
- Advanced Placement, Cambridge International, College Level Exam Program (CLEP), International Baccalaureate Courses, and Dual Enrollment Courses shall include the addition of five (5) percentage points to the grades used to calculate the semester average.

The methodology used to calculate the dual enrollment percentage points, and the conversion chart shall be included annually in the High School Programming Guide.

I.B. Math Studies shall be treated as an Honors, not an A.P. / I.B. course for GPA purposes.

High School courses taken by middle school students will receive honors credit only if taught at the honors level.

Middle school students taking high school courses and high school students taking online courses, will have their grades recorded on the high school transcript with the earned letter grade and corresponding grade point average (GPA).

GPA CALCULATION FOR HIGH SCHOOL COURSES

Grade	Value	Regular	Honors/Pre-AP	Statewide/Local Dual Credit/AP/IB/Dual Enrollment
A	90 – 100	4	4.5	5
B	80 – 89	3	3.5	4
C	70 – 79	2	2.5	3
D	60 – 69	1	1.5	2
F	0 – 59	0	0	0

This weighted grading scale shall be used for all official purposes including report cards, GPA, honor roll, etc.

TRANSFER OF GPA RECALCULATION

Procedure

Upon enrollment, the registrar or counseling staff will review the transfer student's official transcript to identify:

- ***Course titles and letter grades assigned by the previous district; and***
- ***Credit values and grading scale used.***

All high school credited courses will be recalculated using the WCS weighted GPA scale.

Courses will be matched to WCS equivalents to determine appropriate weighting (e.g., honors, AP, dual enrollment).

If course rigor cannot be verified, the course will be treated as a standard-level course.

Documentation

The recalculated GPA will be documented in the student's cumulative record. The original GPA from the sending school will also be retained for reference.

Communication

Families will be notified by the counselor of the recalculated GPA and provided with a summary of the recalculation process. Students may request a meeting with counseling staff to review the recalculated GPA.

Appeals

If a student or family disagrees with the recalculated GPA, they may send a message to the school principal and counselor within ten (10) school days of notification, explaining the appeal request.

Appeals must include supporting documentation (e.g., course syllabi, school profile).

The principal will consult with district staff as needed and issue a final decision within fifteen (15) school days.

LOTTERY SCHOLARSHIPS[3]

Each school counselor shall provide incoming freshman with information on college core courses required for lottery scholarships as well as necessary criteria (grade point average, ACT and SAT score, etc.) that must be met in order to receive a scholarship.

Seniors may apply for the Tennessee HOPE Scholarship by completing the Free Application for Federal Student Aid (FAFSA). The FAFSA is available at the counseling office or online. Students shall be made aware of all applicable FAFSA deadlines and encouraged to submit applications in a timely manner.

LOTTERY SCHOLARSHIP DAY

Each school year, prior to scheduling courses for the following school year, schools teaching students in grades 8-11 shall conduct a lottery scholarship day for students and their parents.[3]

COLLEGE ADMISSIONS

For purposes of communicating with college admissions offices and scholarship granting agencies, grade point averages (GPA) will be calculated.

HONORS RECOGNITION

The weighted GPA will be calculated on all course work using the Williamson County Grading Scale. GPA will also be calculated using the Tennessee Uniform Grading Scale for Lottery/Hope Scholarship purposes. Both the Williamson County weighted GPA and the Tennessee Uniform GPA will appear on the transcript.

Williamson County Schools will not rank students numerically.

For the purposes of honors recognition WCS will use the following Latin System:

Summa Cum Laude 4.25 and above
Magna Cum Laude 4.00-4.24
Cum Laude 3.75-3.99
Valedictorian and Salutatorian will be chosen using the following criteria:

Student must qualify for the highest Latin System honor awarded in the respective school.
Student must sit for the AP /IB exam for every course in which enrolled and must achieve a score of 3 or above on 75% of the AP / IB exams taken. Student will participate in at least 20 hours of community service during their four years of high school.

Students must earn the highest overall ACT composite for their graduating class. The highest ACT is considered the valedictorian(s) and the second highest is considered the salutatorian(s).

Legal References

1. Public Acts of 2025, Chapter No. 330
2. TRR/MS 0520-01-03-.02; State Board of Education Policy 3.301; TCA 49-6-407
3. TCA 49-4-904, 905, 907

Cross References

Credit Recovery 4.210
Transcript Alterations 4.608

POLICY REVIEW OR CREATION REQUEST

This form will be completed for all new policies and all recommendations for revisions to or deletions of policies of the Williamson County Board of Education. Attach any information which would be helpful to understand the proposed changes or actions.

Recommended by: Staff ☐ General Counsel ☐ Board Member X ____Tony Bostic_____

Date Submitted to General Counsel: _____March 28th 2025_____

Recommendation: add ☐, revise X, or delete ☐ the following Policy number(s) and title(s):

4.401 Textbooks and Instructional Materials

Brief summary of the proposed addition or changes:

Pg 2 line 6 – add bullet point stating "*Have any data or studies showing better student outcomes with particular consideration given to any ESSA (Every Student Succeeds Act) Tier data*."

Pg 2 line 12 – change language to "*Any Members of the Board may also choose to serve as ex officio members.*"

Pg 2 line 13 – add language stating, "…submitted to the Board for approval *along with written explanations from teachers, supervisors of teachers, and parents describing the reasoning for recommending the chosen textbook or instructional material. Additionally, any WCS teacher, having distinction within the field of the curriculum which is under consideration for adoption, are encouraged to provide written explanations to the Board regarding their reasoning for recommending a particular textbook or instructional material up for consideration.*"

Pg 2 before line 14 – add new paragraph language stating, "*After the textbook adoption committees' selections are submitted to the Board for approval, a presentation shall be made to the Board with all committee members and any WCS teachers that wish to attend. The purpose of this presentation shall be to facilitate dialogue and discussion between the Board and committee members and teachers in order to provide reasoning and/or feedback about the textbook recommendations submitted by the committee."*

Brief justification of why additions or changes needed or required:

To hone our textbook adoption process in order to build stronger rapport and collaboration between the Board, teachers, and Central Office

Staff analysis of the proposed addition or changes in terms of the following:

Legal implications; educational benefits; impact on the staff at the building level; impact on staff at the district level; immediate and future changes in numbers of assignments of personnel; immediate and future budgetary impact.

Tony Bostic *3/28/25*

Name of Individual Submitting Policy for Review **Date**

Williamson County Board of Education

Monitoring:	Descriptor Term:	Descriptor Code:	Issued Date:
Review: Annually, in November	**Textbooks and Instructional Materials**	**4.401**	**10/24/22**
		Rescinds: **4.401**	Issued: **03/21/22**

General

All classrooms shall be equipped with the textbooks and instructional materials needed to provide quality learning experiences for students in accordance with state law.[1] The Board shall provide a wide range of textbooks and instructional materials that cover all levels of difficulty, generate critical thinking, and support the educational programs.

Part Definitions

Board adopted textbooks and instructional materials shall be defined as any medium or manual of instruction which contains a systematic presentation of the principles of a subject, and which constitutes a major instructional vehicle for that subject.[2]

Supplementary instructional materials shall be defined as additional resources selected by educators to enhance instruction in alignment with the Tennessee academic standards.

SELECTION OF BOARD ADOPTED TEXTBOOKS AND INSTRUCTIONAL MATERIALS

The selection of textbooks to be considered for adoption by the Board and instructional materials shall be completed according to the laws and policies required by the State of Tennessee and the State Textbook and Instructional Materials Quality Commission.[3] The responsibility for Board approved textbook and instructional materials selection rests with the local textbook selection committees, subject to approval by the Board. The Board will appoint textbook selection review committees to review the textbooks and instructional materials that are proposed for adoption. The committees shall be established by grade level and subject matter fields.

The Executive Committee shall prepare a recommended list of committee members for the Board to consider. Members of the committee shall be teachers, supervisors of teachers, and parents with children currently enrolled in a school under the jurisdiction of the Board at the time of the appointment. ***One Board member shall be appointed to serve on the committee and shall subscribe to the oath required by state law.*** Teachers and supervisors who are appointed shall be teaching or supervising the respective grade level or subject at the time of appointment, must be licensed in Tennessee with endorsements in the grade level or subject matter, and must have at least three years of experience teaching in public schools. ***The Board member appointed to the committee shall not be a voting member***. All ***other*** committee members shall be voting members. The Board may appoint experts in the grade level or subject matter field for the textbooks and instructional materials to be reviewed.

The review shall include an examination as to whether the textbooks or instructional materials:

- Conform to the standards for their subject areas or grade levels;

- Are free of any clear, substantive, factual or grammatical errors;

- Contain content that is accurate and free of bias;

- Comply with and reflect the values expressed in §49-6-1028(b), if the textbook or instructional materials are being considered for adoption as a textbook or instructional materials for education of students in general studies and specifically in United States history and this nation's republican form of government.

- ***Have any data or studies showing better student outcomes with particular consideration given to any ESSA (Every Student Succeeds Act) Tier data.***

Prior to the start of the committee members' review of Board approved textbooks and instructional materials, the Board may provide additional parameter(s) for the committee to examine during the selection process. Any additional parameter(s) shall support the educational goals and objectives of the District.

Experts may be college professors or credentialed subject matter specialists. Upon recommendation by the Superintendent, the Board shall determine whether an individual is a credentialed subject matter specialist. Experts so appointed shall not be voting members of any committee but may present information to the committee for consideration.

The Superintendent shall be an ex officio member of all committees appointed and shall not be a voting member. ~~***Any***~~ Members of the Board ~~may~~ ***shall*** also serve as ex officio members ***to gather information to make appropriate approval decisions about the textbook adoption committee's selection and shall not be voting members***. The textbook adoption committees' selections will be submitted to the Board for approval ***along with written explanations from teachers, supervisors of teachers, and parents describing the reasoning for recommending a chosen textbook or instructional material. Additionally, any WCS teacher having distinction within the field of the curriculum which is under consideration for adoption are encouraged to provide written explanations to the Board regarding their reasoning for recommending a particular textbook or instructional material up for consideration.***

After the textbook adoption committee's selections are submitted to the Board for approval, a presentation shall be made to the Board. ~~***with all committee members and any WCS teachers that wish to attend***~~ ***The purpose of this presentation shall be to facilitate dialogue and discussion*** ~~***between the Board and committee members and teachers***~~ ***in order to provide reasoning and/or feedback about the textbook recommendations submitted by the committee.***

All committee members must swear to the oath required by state law. The members of the committees appointed shall serve for the length of time the adoption process for which they are appointed lasts.

At least one set of publishers provided review materials to be considered by the committees shall be available at the central office during the review period for examination by Board members, WCS employees, and the general public. Online access to the textbooks and materials shall be provided to the

fullest extent possible. The public will be made aware of the dates the textbooks and materials are available for review prior to their adoption.[4]

SELECTION OF SUPPLEMENTARY INSTRUCTIONAL MATERIALS

The responsibility for selection of supplementary instructional materials is delegated to the professionally trained personnel employed by the school system. Selection of supplementary instructional materials may involve many people including library media specialists, curriculum specialists, teachers, students, principals, administrators, parents, and the community.

Gifts of supplementary instructional materials, meeting the selection standards, may be accepted.

INSPECTION AND REVIEW

Board approved textbooks, instructional materials and/or supplementary instructional materials shall be available for inspection by parents/guardians upon request. The Superintendent shall develop procedures for inspection of materials and distribute these procedures to each principal.[5]

CARE OF BOARD APPROVED TEXTBOOKS, INSTRUCTIONAL MATERIALS, AND SUPPLEMENTARY INSTRUCTIONAL MATERIALS

Instructional materials supplied to students by the Board are district property, and the teacher shall see that they are taken care of and returned by the close of the school year. Parents and guardians shall accept full responsibility for the proper care, preservation, return, or replacement of instructional materials that are issued to their children.

Fines may be assessed at the discretion of the principal in cases where the student or parent/guardian damages, loses, or defaces the textbook or instructional material. The principal may include with the notice a provision stating that failure to pay the fine imposed within a reasonable time may result in the imposition of one of the following sanctions:

1. Refusal to issue any additional textbooks until restitution is made; or

2. Withholding all report cards, diplomas, certificates of progress, or transcripts until restitution is made.

The principal also reserves the right to waive fines when appropriate.

RECONSIDERATION OF BOARD APPROVED TEXTBOOKS, INSTRUCTIONAL MATERIALS AND SUPPLEMENTARY INSTRUCTIONAL MATERIALS[6]

A complaint about Board approved textbooks, instructional materials and supplementary instructional materials may only be made by a current WCS parent/guardian, employee, or student. If there is a complaint, this process is to be followed:

1. Inform the complainant of the selection procedures and make no commitments.

2. Request the complainant complete and submit a Request for Reconsideration of Board Approved Textbooks, Instructional Materials and/or Supplementary Materials form.

3. Inform the Superintendent of Schools and other appropriate personnel.

4. Keep challenged materials available for use during the reconsideration process. An individual parent may request that his/her child not have to use a given Board approved textbook, instructional material or supplementary material provided a written request is made to the principal. The materials shall be removed immediately if they:

    a. Were created to align exclusively with Common Core; or

    b. Are marketed or otherwise identified as Common Core textbooks or instructional materials.

5. The principal shall request review of the challenged materials by an ad hoc materials review committee within fifteen (15) working days. The ad hoc review committee is appointed by the Superintendent or designee within seven (7) working days of receiving the request for review and includes representatives from central office staff, classroom teachers, one or more parents, and may include one or more students.

6. The ad hoc review committee shall take the following steps after receiving the challenged materials:

    a. Read, view, or listen to the material in its entirety;
    b. Check general acceptance of the material by reading recognized and evaluative reviews;
    c. Determine the extent to which the material supports the curriculum;
    d. Complete the appropriate Checklist for Reconsideration of Board Approved Textbooks, Instructional Materials and/or Supplementary Instructional Materials, judging the material for its strength and value;
    e. Invite the complainant to an interview; and
    f. Present decision to complainant and the Superintendent or designee.

If the complainant or any affected employee of WCS wishes further action after receiving the decision of the ad hoc review committee, an appeal may be made to the Board of Education within fifteen (15) working days of the date of the ad hoc review committee decision. This appeal should be made in writing to the Superintendent of Schools who shall schedule the matter on the agenda of the next regular meeting of the School Board. If no appeal is filed within the above deadline, the determination of the ad hoc review committee shall be final for up to two (2) years. The decision of the Board may be binding for up to two (2) years, and the Board may determine the scope of its decision throughout the district.

Legal References

Cross References

1. TCA 49-6-2207; TCA 49-2-203(a)(3)
2. TRR/MS 0520-05-01-.01
3. TCA 49-6-2207(c), (e), (f); TCA 49-6-2202(d); TRR/MS 0520-01-18-.02
4. 20 USCA § 1232h(a); TCA 49-6-7003
5. TCA 49-6-7003
6. TCA 49-1-302(a)(8); TCA 49-1-314; TCA 49-6-2206

Surplus Property Sales 2.403
Library Materials 4.403
Student Fees and Fines 6.709

POLICY REVIEW OR CREATION REQUEST

This form will be completed for all new policies and all recommendations for revisions to or deletions of policies of the Williamson County Board of Education. Attach any information which would be helpful to understand the proposed changes or actions.

Recommended by: Staff ☐ General Counsel ☐ Board Member X _ Claire Reeves__

Date Submitted to General Counsel:
_9/23/25_____

Recommendation: add ☐, revise X, or delete ☐ the following Policy number(s) and title(s):

Use of Wireless Communication Devices 6.312

During the June work session and board meeting, discussion made it clear that some on the Board did not want to delay updates to the wireless communication device policy. In fact, the purpose of scheduling committee discussion about this policy for August and September was to ensure the Board would have time to review their suggestions and revise the policy in time for meaningful implementation during the current school year.

However, the committee's recommendation included a delay that wasn't requested by the Board nor aligned with the urgency we expressed in those meetings. To that end, I'm submitting this policy review request for our October policy meeting to align with both the new state law now in effect and the Board's originally stated timeline for action.

Brief summary of the proposed addition or changes:

Please refer to attached documents. I have included the rewritten policy, the committee feedback document from the September work session, a comparison chart outlining the current policy and the proposed revisions, and emails sent to the Board from parents in support of an "Away for the Day" policy, including three committee members, and Warren County's "Away for the Day" policy.

Elementary Committee Feedback Committee Concerns	**How Revised Policy 6.312 Addresses Concerns**
Clarify that 'silenced' also means off-body	Explicitly states devices must be stored off-body, not in pockets or on wrists.
Watches are still a concern	Smartwatches fall under the same policy as phones and must also be stored off-body.
Reinforce cubby/backpack storage	Allows for classroom-specific storage solutions.
Developmentally appropriate consequences	Includes tiered, age-appropriate consequences provided by the committee.

Middle School Committee Feedback

Committee Concerns	How Revised Policy 6.312 Addresses Concerns
Clarity on 'silenced' devices	Updated to require devices be 'silenced and stored off the body'.
Define educational purpose	Policy defines specific educational use, aligned with curriculum.
Keep lunch, transitions, study hall off-limits	Policy consistently prohibits use during all school day periods.
Consequences tied to Code of Conduct	Includes tiered, age-appropriate consequences provided by the committee.

High School Committee Feedback

Committee Concerns	How Revised Policy 6.312 Addresses Concerns
Anticipated resistance to lunch restrictions	Policy enforces consistent bell-to-bell rules, including lunch. To prepare students and staff, enforcement would begin January 2026.
Concern about student/parent communication	Emergency Communication section outlines staff-led parent contact and safe opportunities for student contact when appropriate.
Request for clearer language about transition periods	Defines 'school day' to include class transitions, eliminating ambiguity.
Support for phone pouches or lockers	Policy permits storage in lockers, backpacks, or teacher-designated areas, supporting pouch/locker implementation.
Clarify educational use	Defines educational use with clear examples and prohibits general access to devices.
Graduated consequences	Includes tiered, age-appropriate consequences provided by the committee.

Family Feedback Trends From Survey

Family Feedback	How Revised Policy 6.312 Addresses Family Feedback
Desire for clearer enforcement	Policy includes visible, structured consequence ladders for all levels.
Concern about emergency access and safety	Includes language about emergency communication through school channels.
Concern about distractions, social issues, and mental health	Policy rationale ties device restriction to improved focus and well-being.
Mixed views on device use during non-instructional times	Policy provides consistent bell-to-bell expectations for ease of enforcement.
Support for stricter device rules, especially for younger students	Applies consistent rules across K–12 while preserving flexibility via accommodations.
Recognition of need for balance and accommodations	Preserves exceptions for IEPs, 504s, Health Plans, and assistive technology.

Brief justification of why additions or changes needed or required:

School districts across the nation are moving toward consistent "Away for the Day" policies for grades K-12 and for good reason. The revised policy begins with a purpose section so that all stakeholders understand the rationale for the policy.

What is one of the biggest benefits of "Away for the Day"? Enforcement becomes easier and more consistent when the rules are consistent across all grade levels. Right now, our policy allows partial device usage in high school. That inconsistency actually makes it harder for staff to enforce. When phones are allowed "sometimes" or in certain places, it creates gray areas and leads to frustration for both students and teachers.

We see this reflected in the data (https://www.pewresearch.org/short-reads/2024/06/12/72-percent-of-us-high-school-teachers-say-cellphone-distraction-is-a-major-problem-in-the-classroom/) :

- 60% of high school teachers say phone enforcement is difficult (Pew Research).
- Only 12% of elementary teachers say the same. One key difference is that policies for younger grades tend to follow a clear "Away for the Day" model.

Furthermore, what's working for our middle schoolers should work for our high schoolers. A clear, consistent policy of away, off the body, all day is easier to enforce and helps everyone stay on the same page.

And let's be honest: if parents check their high schooler's screen time, it's usually not spent on college or job apps. It's overwhelmingly spent on social media (TikTok, Snapchat, Instagram) not on ACT scheduling or "essential communication." That kind of phone use is a distraction from learning and face-to-face socializing.

Yes, high schoolers need to learn responsibility, but that includes knowing when and where to use their phones. Tasks like scheduling the ACT, replying to a boss, or checking notifications don't need to happen during lunch. That's what before and after school is for.

Independence for our high schoolers doesn't come from phone access during the school day. Real independence means managing your time, planning ahead, and owning your responsibilities. That's the kind of growth this policy encourages.

Staff analysis of the proposed addition or changes in terms of the following:
Legal implications; educational benefits; impact on the staff at the building level; impact on staff at the district level; immediate and future changes in numbers of assignments of personnel; immediate and future budgetary impact.

Claire Reeves	**9/23/25**
Name of Individual Submitting Policy for Review	**Date**

Policy 6.312 Use of Wireless Communication Device Policy (Away for the Day)

Purpose

This policy is required by Tennessee law and establishes clear and consistent expectations for the possession and use of personal wireless communication devices by K–12 students. Its purpose is to ensure that instructional time and school environments remain free from unnecessary distractions and to promote student engagement, well-being, safety, and a positive school environment.

Research and safety experts agree that limiting device use during the school day:

- Improves learning by keeping students focused and engaged.
- Supports well-being by reducing social pressures, bullying, and anxiety.
- Strengthens safety by ensuring students follow staff directions in an emergency. Parents will be notified through the school's emergency communication system. Safety experts caution that parents calling or texting students during an emergency can put students at greater risk by drawing attention to them and disrupting established safety procedures.

Definition

For purposes of this policy, wireless communication devices include, but are not limited to:

- Cell phones
- Smart watches
- Ear buds / AirPods
- iPods / MP3 players
- CD players, Walkmans, or radios
- Pagers or beepers
- Handheld electronic games
- Non-school issued laptops or tablets or any portable devices capable of communication or gaming

General Rule

K–12 students are prohibited from using personal wireless communication devices during the entire school day (i.e., first bell of the day to last bell of the day), including instructional periods, class tranistions, study halls, and lunch time.

All devices must remain silenced and stored off the body in:

- Backpacks, purses, or similar personal bags
- Teacher-designated storage areas within the school setting
- Lockers
- Personal vehicles

Devices may not be stored in clothing, pockets, or on the body, as this allows for easy access.

School Setting

"School setting" includes all areas of the campus or school-sponsored environments during the school day, whether instruction is actively occurring or not, including but not limited to:

- Classrooms and libraries
- Lunch areas and auditoriums
- Gymnasiums and physical education areas (indoor and outdoor)
- Performing arts areas
- Locker rooms
- Administrative offices

- Nurse's office, counseling/medical/psychological spaces
- Bathrooms
- School Buses and other district-provided transportation for field trips/travel during school day

Leaving class during instructional time to use a device in another school setting is a violation of this policy.

Emergency Communication

All staff members have access to communication devices during the school day and may contact the school office in case of an emergency.

In an emergency, school staff will initiate established communication protocols to notify parents/guardians by text message, email, and/or phone call. Students will also be permitted to contact a parent/guardian once it is safe to do so under staff direction.

Safety experts strongly caution against parents calling or texting students during an active school emergency, as this can draw attention to students' locations and interfere with their ability to follow safety instructions. Parents are urged to await official communication from the school.

In non-emergency situations, parents/guardians will be contacted by school officials via text message, email, or phone call.

Exceptions

Students may use personal communication devices only when:

1. Authorized by a teacher for a specific educational purpose. A "specific educational purpose" means that the device is being used as a tool directly tied to the learning objectives of the lesson and under active teacher supervision.
   Examples include:
   a. Accessing a teacher-directed digital resource not otherwise available on school-issued technology.
   b. Using translation or accessibility applications as part of instructional activities.
   c. Documenting a project, experiment, or performance when directed by the teacher.
   d. Participating in structured class activities (e.g., polling software, classroom response systems) where the teacher requires device access.

   Educational purpose does not include:
   a. Free or unsupervised internet browsing.
   b. Listening to music, playing games, or watching videos unrelated to instruction.
   c. Messaging, social media, or personal communication.
   d. Using the device as a reward or filler activity in lieu of teacher-directed instruction.

   Teacher authorization may not be granted for the purpose of convenience when school-issued devices or classroom materials are available for instructional purposes. Permission to use a personal device is an exception, not the norm, and should be revoked immediately if misused.

2. Required by an IEP, 504 Plan, or Health Care Plan.

3. Needed to manage a documented medical condition in accordance with a healthcare provider's orders.

4. Used as approved assistive technology. Assistive technology refers to any item, equipment, or system that increases, maintains, or improves the functional capabilities of a student with a disability.
   Examples include:
   a. A smartphone or tablet with text-to-speech or speech-to-text features for students with reading or writing disabilities.

b. Accessibility apps that provide communication support for students with speech or language impairments.
c. Audio recording functions permitted for students with documented memory, auditory processing, or attention-related disabilities.

Use of assistive technology must be:

a. Clearly documented in the student's IEP, 504 Plan, or Health Care Plan
b. Approved by the case manager, school administrator, or designated staff.
c. Limited to functions directly tied to the accommodation or support need.
d. Any use of a device outside of the documented accommodation (e.g., texting, gaming, or personal use) is a violation of this policy and subject to disciplinary action.

Student use under these exceptions is not a student right but a limited accommodation/authorization.

Prohibited Uses

Students are prohibited from:

1. Using devices in any manner that threatens academic integrity, disrupts learning, or violates privacy rights.
2. Using devices to cyberbully, harass, or threaten another student
3. Taking, sending, sharing, viewing, or possessing pictures, text messages, emails, or other material depicting sexually explicit conduct, as defined in Tennessee Code Annotated § 39-17-1003 and related statutes (including § 39-17-1002), while the student is on school grounds, at school-sponsored events, or on school buses or vehicles provided by the district.
4. Recording or photographing without consent.
5. Students may not use personal devices to access the internet through unauthorized means (e.g., personal hotspots, VPNs, or circumvention of school network filters).
6. Charging devices using school resources during the school day.

Search & Seizure of Devices

By bringing a device to school, students and parents/guardians acknowledge that the device is subject to search by a school administrator if there is reasonable suspicion, based on objective facts, that the device contains evidence of a violation of school policy or law. Any search will be conducted in a manner consistent with federal law (New Jersey v. T.L.O.) and Tennessee law (T.C.A. § 49-6-4204 and § 49-6-4205) and will be limited in scope to the suspected violation. Content or images that violate state or federal law may be referred to law enforcement.

Staff Expectations

Teachers and staff members will consistently and fairly enforce this regulation. Teachers will clearly designate storage areas in classrooms for students who cannot store devices in backpacks, lockers, or purses/bags.

Teachers and staff will not use phone breaks as student rewards.

Teachers and staff should model appropriate device use by refraining from personal use during instructional time.

Student & Family Responsibilities

Bringing a personal wireless communication device to school is strictly optional. These devices are not required for instruction and do not enhance learning during the school day.

Students are solely responsible for any personal wireless communication devices they choose to bring to school or school-sponsored events. The school district will not assume responsible for loss, theft, damage, or unauthorized use of these devices.

Consequences

Any visible device during school hours may be confiscated. Confiscated devices will be secured and returned to the student at the end of the school day.

Violations of this policy will result in disciplinary action. Repeated violations will lead to progressive consequences. Final determination of disciplinary measures rests with school administration.

Elementary School

- First Offense: Device placed in cubby/backpack. Teacher/staff member communicates with student and family, reteaching of expectations. Device goes home with student at end of day.
- Second Offense: Device sent to administrator. Administrator communicates with student and family, reteaching of expectations. Device returned to student at end of day.
- Third Offense: Device sent to administrator. Administrator communicates with student and family, reteaching of expectations. Parent/guardian required to pick up the device.

Middle School

- First Offense: Teacher/staff member redirects student to put device away. Reteaching of expectations. Student stores device away until end of class/day.
- Second Offense: Teacher/staff member confiscates device and delivers to administration. Parent notified; parent must pick up device at end of day.
- Third Offense: Escalated consequences for non-compliance, which may include loss of privilege (device held in office), demerits, or detention, or in-school suspension.

High School

- First Offense: Teacher/staff member redirects student to put device away. Reteaching of expectations. Student stores device away until end of class/day.
- Second Offense: Devic confiscated and delivered to administrator who notifies parent and reviews expectations with student. Parent conference held as needed.
- Third Offense: Escalated consequences for repeated non-compliance. Focus shifts to addressing pattern of behavior. Examples of escalated consequences include loss of privilege (device held in office), detention, or in-school suspension.

Additional Consequences (All Grades)

- Referral to law enforcement may occur if device use involved content or behavior that violates state or federal law.
- Progressive consequences beyond the third offense may be applied at the discretion of the school administration in alignment with the Student Code of Conduct.

Legal References

- **New Jersey v. T.L.O. (1985):** Established that school officials may search students on "reasonable suspicion," a lower standard than probable cause.
- **T.C.A. § 49-6-4204, § 49-6-4205:** School officials may search students' personal possessions (including electronic devices) with reasonable suspicion.

- **T.C.A. § 39-17-1002, § 39-17-1003:** Defines and criminalizes sexual exploitation of minors, covering sexually explicit conduct.
- **T.C.A. § 49-6-1401 et seq.:** (Bullying & Harassment statutes, if cross-referenced under "prohibited uses").
- Public Acts of 2025, Chapter No. 103

Cross References

- Code of Conduct 6.300

Old vs New Policy Comparison

Section	Current Policy	New Policy
Purpose	No purpose section.	Explicit Purpose section. States policy required by TN law (Public Acts of 2025, Chapter 103). Adds expert rationale citing safety, well-being, and learning benefits.
Definitions	Devices defined generally as any portable wireless device with voice, messaging, or data capability (wearable tech, cell phones, laptops, tablets, gaming devices).	Expanded definition: includes phones, smart watches, earbuds, iPods, MP3 players, radios, pagers, handheld games, non-school issued laptops or tablets, or any portable communication/gaming device.
General Rule	Grades K-8: devices silenced, not used. Grades 9-12: devices silenced, not used except during lunch.	Prohibits use during entire school day (first to last bell), including transitions, study halls, and lunch. Stronger than old policy. Devices must be stored off-body.
School Setting	No definition of 'school setting' provided. Policy focused on possession/use by grade level rather than locations.	Defines 'school setting' comprehensively: classrooms, gyms, libraries, admin, nurse, counseling, bathrooms, locker rooms, buses, and field trips.
Emergency Communication	Emergency plan: parents alerted via text/email/phone in event of emergency. No detail on student contact or safety expert guidance.	Detailed section: staff initiate emergency protocols; students may contact parents once safe. Explicit safety expert caution against parents calling/texting during emergencies.
Exceptions	Permitted uses: emergencies, teacher authorization for educational purposes, healthcare plans, IEP/504, assistive technology. Broad and flexible with little restriction.	Exceptions narrowly defined. Teacher authorization requires direct link to instruction. Convenience uses excluded. Includes detailed safeguards for assistive technology. Exceptions explicitly not student rights but accommodations.
Prohibited Uses	Prohibited uses implied by context but not detailed. Did not specify cyberbullying, unauthorized internet use, charging, or privacy violations.	Expanded prohibited uses: academic dishonesty, cyberbullying, harassment, threats, explicit conduct (T.C.A. 39-17-1002 & 1003), unauthorized internet (hotspots/VPNs), recording without consent, charging at school.
Search & Seizure	Search authority implied under general district authority, not detailed. No explicit reference to T.L.O. or TN law in this version.	Detailed section: searches by administrators only, based on reasonable suspicion. References New Jersey v. T.L.O., T.C.A. 49-6-4204, 49-6-4205. Scope limited to suspected violation.
Staff Expectations	No staff expectations outlined. Enforcement not detailed beyond confiscation possibility.	Staff must enforce consistently, designate storage, model good behavior, and not use phones as rewards. Clearer than old policy.
Student & Family Responsibilities	Students permitted to bring devices. No statement that bringing is optional or not required. Liability not explicitly disclaimed.	Explicitly optional. Not required for instruction or learning. Students solely responsible. District not liable for loss, theft, or damage.
Consequences	Unauthorized use may result in confiscation for the day. General disciplinary action referenced, but no tiered framework or escalation by grade.	Tiered consequences by grade band (elementary, middle, high) with escalating actions (reteaching, parent pick-up, loss of privilege, detention/ISS). Referral to law enforcement possible. Progressive consequences beyond third offense allowed.

Wireless Communication Device 6.312

Elementary (K-5)

Identify areas you feel additional refinements should be made and provide suggestions for those refinements.

Area or Time:	Refinement Needed:	Suggested Refinements to Policy:
Before or After School		
Bus	☐ Yes ☑ No	Phones on buses are difficult to manage; administrators will respond if issues arise.
Hallway during arrival and dismissal times	☐ Yes ☑ No	Included within the definition of the school day.
On campus early arrivers and those staying late	☐ Yes ☑ No	See above*
During the School Day		
Class Change - Not allowed in current policy	☐ Yes ☑ No	N/A
Lunch - Not allowed in current policy	☐ Yes ☑ No	N/A
Study Hall - Not allowed in current policy	☐ Yes ☑ No	N/A
Recess - *Not allowed per TN Recess Law*		
Language in Policy		
"When authorized by a teacher for educational purposes"	☐ Yes ☑ No	Clarify non-school issued laptop or tablet.
Devices are "*Silenced*"	☑ Yes ☐ No	Silenced, and add stored off the body. As the policy currently reads, the student could have it on their body if it is silenced. How would this be monitored during recess, lunch, etc.?
Devices are "*Not used during the school day*"	☐ Yes ☑ No	More clarification on what "school day" means. Determine when this would be appropriate.
Additional areas not identified or change in wording	☑ Yes ☐ No	Add clarification as it relates to ear buds/airpods (line 7-8 of the policy)

Consequences	☐ Align to the code of conduct ☐ Create consequences as part of this policy ☑ No recommendations on consequences State any clarifications in this space.
If refinements are made to the current policy, when should they be implemented? 2026-2027 school year	

***Consensus was reached in all areas.**

Wireless Communication Device Policy Review 6.312

Middle (6-8)

Identify areas you feel additional refinements should be made and provide suggestions for those refinements.

Area or Time:	Refinement Needed:	Suggested Refinements to Policy:
Before or After School		
Bus	☐ Yes ☑ No	Reached agreement that no policies needed but education may need to be given to families
Hallway during arrival and dismissal times	☐ Yes ☑ No	Reached agreement that no policy change needed. Leave up to the different schools to create policy based on needs.
On campus early arrivers and those staying late	☐ Yes ☑ No	Reached agreement that no policy change needed. Hard to set a policy with all the different situations.
During the School Day		
Class Change - Not allowed in current policy	☐ Yes ☑ No	Reached agreement no policy change needed
Lunch - Not allowed in current policy	☐ Yes ☑ No	Reached agreement no policy change needed
Study Hall - Not allowed in current policy	☐ Yes ☑ No	Reached agreement no policy change
Recess - *Not allowed per TN Recess Law*		
Language in Policy		
"When authorized by a teacher for educational purposes"	☑ Yes ☐ No	Need to define educational purpose (example: access to curriculum)
Devices are "*Silenced*"	☑ Yes ☐ No	Change to be more clear "Silenced and not on the body"
Devices are "*Not used during the school day*"	☐ Yes ☑ No	Reached agreement no policy change
Additional areas not identified or change in wording	☑ Yes ☐ No	Change the wording on line 9 - the word may implies possible- change to state "A student

		shall have access…”
Consequences	☐ Align to the code of conduct ☐ Create consequences as part of this policy ☑ No recommendations on consequences	
If refinements are made to the current policy, when should they be implemented? 2026-2027 school year		

Wireless Communication Device Policy Review 6.312

High (9-12)

Identify areas you feel additional refinements should be made and provide suggestions for those refinements.

Area or Time:	Refinement Needed:	Suggested Refinements to Policy:
Before or After School		
Bus	☐ Yes ☑ No	
Hallway during arrival and dismissal times	☐ Yes ☑ No	
On campus early arrivers and those staying late	☐ Yes ☑ No	
During the School Day		
Class Change - Not allowed in current policy	☑ Yes ☐ No	Needs to be stated explicitly in policy "not used during the school day including transition/passing periods"
Lunch	☐ Yes ☑ No	
Study Hall - Not allowed in current policy	☐ Yes ☑ No	
Recess - *Not allowed per TN Recess Law*		
Additional areas not identified or change in wording	☑ Yes ☐ No	New wording "The only time the device may be used during school hours is during the lunch period for 9th-12th grade students." Some were concerned that gaming devices were included and thought it should be removed.
Language in Policy		
"When authorized by a teacher for educational purposes"	☐ Yes ☑ No	

Devices are "*Silenced*"	☐ Yes ☑ No	
Devices are "*Not used during the school day*"	☑ Yes ☐ No	New wording "The only time the device may be used during school hours is during the lunch period for 9th-12th grade students."
Consequences	☑ Align to the code of conduct ☐ Create consequences as part of this policy ☐ No recommendations on consequences State any clarifications in this space. We liked the consequences presented by administrators at the meeting and felt they were appropriately tiered for the grade levels (K-5, 6-8, 9-12)	
If refinements are made to the current policy, when should they be implemented? Refinements should be made at the end of the school year based upon collection and analysis of data about this year's enforcement. The High School group strongly feels that high school level students as emerging adults need opportunities to practice age-appropriate independence in preparation for their imminent college and career paths. Additionally, high school students use their personal emails/phone numbers for communications from college applications, ACT/AP testing, jobs, etc that our network security does not allow them to access. Having the ability to access phones at lunch allows them opportunities to address any deadlines or other tasks associated with preparation for their post-graduation journey.		

We reached consensus in all areas.

QUESTION: Some schools have students put phones in pouches or lockers. Our policy just says students may "possess devices" - Our team believes the pouches/lockers are beneficial for students - can this be added to the policy? - Some type of storage

From: [redacted] - Adam is on the technology use committee
Date: Tuesday, May 13, 2025 at 2:28 PM
To: Claire Reeves [redacted]
Subject: WCS Personal Device Policy - New State Law

Dear Claire,

I'm a WCS dad of four and wanted to reach out to you about WCS's personal device policy. As you likely know, the Tennessee State Legislature has passed a new law which requires all school districts, including WCS, to develop a wireless communication device policy. WCS already has acceptable use guidelines, but they are very permissive, allowing students to use devices during non-instructional time, or with teacher permission.

The state law provides a "floor," requiring districts to restrict use during instructional time without teacher permission, but leaves it to districts to decide in their policies about use during non-instructional time, and when teachers can grant permission for students to use the phone.

The law takes effect on July 1, and WCS is required to develop a policy by the start of the school year. As you board deliberate on the policy, I encourage you to include two key elements:

- Enact a "bell-to-bell" (also called "away for the day") policy, where students are not permitted to use their phone the entire day. Phone use during instructional time is already restricted by WCS guidelines, but phone use during non-instructional time may be even more harmful, contributing to bullying, anxiety and social disconnection. This is true across all age bands, from elementary through twelfth grade.
- Eliminate use of phones in class with teacher permission. Although flexibility is always appealing, there are three main issues with this:
    - teachers requiring cell phone use for instruction, which creates issues for students without phones (for example, using personal phones in art class for drawing, or requiring phone usage to submit weightlifting records in PE). Since WCS provides devices for students, asking students to use their personal phones is unnecessary and inappropriate.
    - teachers using phone access as an incentive. In many classes, teachers assign a worksheet and tell students that they can use their phones when the worksheet is done. This creates an incentive for students to rush through the worksheet, and crowds out instruction that could be taking place.
    - Inconsistencies between classrooms and across the district. In my conversations with staff and parents around WCS, I was surprised to learn how much variability there is by school. Teachers I've spoken with would prefer a district-wide uniform policy so they don't have to play the role of "phone police" in their classrooms.

I'm certain you're familiar with the ample research on the downsides of personal phone use in schools, but I have found Away for the Day and the Phone Free Schools Movement to be particularly helpful. I have included some key research results at the bottom of my email.

I know that some parents prefer to be able to contact their students during the day, but from talking to teachers and administrators, this seems to yield more problems than benefits. The

state law includes exceptions for emergencies, and parents can always reach their student by calling the office. In a true emergency, students need to be following the instructions of their teachers, not texting with their parents. In national surveys, a substantial majority of parents support bell-to-bell restrictions.

Arkansas, South Carolina and Louisiana have implemented statewide bell-to-bell policies, as have nearly all private schools in and around Williamson County have In fact, about 40% of schools in the US have already implemented bell-to-bell policies, and the proportion is skyrocketing

I encourage the WCS board to pass a bell-to-bell policy for the benefit of our students. Thanks for considering, and for all the work you do for WCS.

Adam

PS I'm on the newly-formed WCS screen time committee. I'm very excited about this, but the committee is not scheduled to meet over the summer, so our report won't be available in time for your policymaking. My sense is that WCS staff are planning to recommend doing the "floor" required by state law (which is already in our acceptable use guidelines) and to defer further decision making until the 2026-2027 school year, which is too late, in my opinion, so I hope the board will act now.

Benefits and Outcomes of Bell-to-Bell Policies

Academic Performance

Removing or limiting phones can boost student learning. For example:

- A UK study found schools that instituted phone bans saw test scores improve by ~6%, especially among lower-achieving students.

- In the U.S., an analysis by Yondr in 2024 across 37,000 grades found student pass rates and GPAs rose by an average of 6.3% after phone restrictions and high school juniors and seniors had a 38% higher probability of earning passing grades in core classes after phones were removed

- At KIPP NYC College Prep, stricter phone rules coincided with higher AP exam scores and overall grade improvements post-pandemic.

- Teachers report being able to cover more material and assign longer tasks once phones are removed from the classroom.

Student Behavior and Discipline

Bell-to-bell policies have correlated with significant reductions in student misbehavior:

- Bentonville, Arkansas reported a 57% drop in verbal or physical aggression incidents post-ban.

- A California high school using Yondr pouches saw a 75% reduction in behavioral referrals after adopting a phone-free policy.

- NEA survey (2024): 90% of teachers supported prohibiting phones during instructional time, 83% supported full-day bans.

Student Engagement and Social Interaction

Bell-to-bell policies appear to encourage more peer interaction:

- After Newburgh Free Academy in New York banned phones, teachers noted the lunchroom became noisier with kids playing cards instead of watching Tiktok.

- KIPP NYC observed a 50% increase in attendance at after-school events post-ban.

- Bentonville teachers reported 86% of students were more engaged in lessons, and 75% showed more in-class peer interaction after phone bans.

Mental Health and Well-Being

In terms of mental health, research on bell-to-bell policies suggests:

- Schools report reductions in cyberbullying incidents and viral challenge disruptions after banning phones. xxxx

- Students often report feeling less overwhelmed by social media drama during school hours post-ban.

School Safety Considerations

- Some parents worry about communication during emergencies, but educators and safety experts caution that student cell phone use during emergencies increases danger by distracting students from safety and emergency response directions from teachers and staff, promoting rumors that can cause panic and impeding public safety response by causing parents to rush to the scene before first responders can secure the scene and evacuate students (we saw this recently at Ravenswood).

- Student use of cell phones during emergencies can interfere with first responder communication.

- Even worse, cell phone use can directly endanger students by attracting intruders to the "ding" of a student's phone.

- The mother of a student who died in the Marjory Stoneman Douglas school shooting has advocated for phone bans along with school safety investments.

- Schools typically permit emergency exceptions, and emphasize rapid communication through official channels.

Email from Chad Grout on July 12, 2025
Hello, Board Members.

I have never reached out, nor have I met any of you before. I have a daughter at [redacted] and two daughters [redacted] and one son [redacted]

Recently I was made aware of a new school policy that is either banning or reducing device usage in Williamson County schools. BRAVO. These devices are stealing so much from our society in so many ways, especially our youth. I support full banning of all devices in all schools, so thank you for anything you choose to do along that front.

By the way, I went to my first soccer game at Geodis Park the other day, as a guest. You have to use your phone to scan your tickets to get into the stadium. You have to use your phone to pay for concessions (no cash; they do still take cards). Our hosts had an upgraded seat section so they had to scan their phones for us to access our seats. Yes, this meant they had to escort us to the bathroom so they could scan us back into our seats. It has absolutely gotten ridiculous.

Thank you for looking out for our kids.

Chad Grout
Brentwood, TN
[redacted]

Email from [redacted] – July 10, 2025
Williamson County Board-

My [redacted] and I have read The Anxious Generation by Jonathan Haidt. [redacted] dad, and I are passionate about schools becoming phone free bell-to-bell for k-12, including lunch time and including phones not being with students in backpacks during the day. [redacted]

[redacted] Classmates have repeatedly shared sexual content [redacted] during class hours, both on their personal devices and on school Chromebooks through YouTube. Through social media, due to same grade classmates sending male full frontal nudity of themselves (more than 2 dozen images on Snapchat), [redacted] decided to give up socials in February 2025 (Snapchat, Insta, TikTok), after which [redacted] experienced extreme loneliness at the lunch table, as [redacted] table-mates continued with their social media habits, leaving [redacted] to sit in silence. As a result, [redacted] current solution for [redacted] is to allow dual enrollment as much as possible from home so that [redacted] can have social interaction (with family) during the day, while still participating in [redacted] and extra-curricular school activities. If [redacted] were to offer social freedom (phones free) during lunch, however, [redacted] would be motivated to actually be able to talk to [redacted] friends during the day.

As a counselor at a local church camp where phones are not allowed for kids 5th-HS graduates 2013-current, I have noticed that while some kids may be hesitant to turn in phones initially, none of them asks for [redacted] phone when real life social interaction is offered as an alternative. The freedom from phones comes when the majority of peers are not turning to their phones for social interaction. Giving up a personal phone does not bring relief from the phone addiction for teens; the relief comes when a group of friends practice social freedom together. When offered to option to use social media or not, the truth of addiction tells us teens will almost always choose the phones. But, if we can offer these highly social kids an environment where friend groups are interacting without screens, I believe they will show us a way out of depression, loneliness, and anxiety. They are delightful individuals who are desperate for us to speak up for their social wellbeing. And, I believe many younger Gen Z in our community are ready to work on a solution.

Thank you!

[redacted]

Katie Schlacter emailed on May 18, 2025 – Katie is on the technology use committee
Dear WCS school board members,

My name is Katie Schlacter and I am a parent of [redacted]. First of all, thank you very much for your service on the school board.

I'm sure you're aware of the recent legislation that passed in TN that prohibits cell phone use during school instructional time. I am thrilled about this progress and think it's a step in the right direction. As I understand it, a new Tennessee state law requires all districts to develop a personal device policy this summer before the 2025/2026 school year starts. **I hope that Williamson County Schools will consider adopting a phone-free schools policy that encompasses the entire day, during both instructional time and free time.**

The presence of smartphones undermines our students' educational experience and creates an unnecessary burden for our teachers as they struggle to police these devices. Smartphones facilitate cyberbullying, physical fights, privacy violations, and exposure to inappropriate and harmful content. Lack of face-to-face interactions during free periods diminish our children's empathy and leave them unable to handle conflict resolution.

Research shows that smart phones are addictive and distracting, impede executive funtioning skills, lead to poor academic performance, harm school safety efforts and even enable cheating on exams. Further, the surgeon general last year asked Congress to put a warning on social media apps because of mental health dangers that they pose. Problematic phone use can no longer be considered an individual decision. In a school environment, it negatively impacts the community as a whole. These issues spill over to the non-users, as bystanders in the hall or in the lunchroom are also exposed to the distractions and harmful content, even if they do not have a phone.

I am on the newly formed WCS screen time committee. I look forward to exploring the many facets digital technology use in schools with this group over the next year. However, I hope the board will act now on the issue of personal devices. From my experience and from what I have heard from other parents and teachers in our community, this as an urgent issue for our schools that cannot wait.

Again, I very much appreciate your work on behalf of the community.

Best,
Katie Schlacter
[redacted]

Email from Crystal Basham sent on May 16, 2025

Dear School Board Members,

I hope this message finds you well. As a parent of [redacted] children in Williamson County Schools, I want to thank you for your commitment to the development, growth, and education of our children. Our family moved to Williamson County four years ago to allow our children to take full advantage of this amazing school district, and we are so grateful for the opportunities each of them are afforded in our local schools. We believe in the role of public schools and the vital role they play in our communities as they foster young minds and raise future leaders - so thank you for the part that you play.

It is my understanding that you will be voting as a board on the Personal Device Policy that WCS will adopt for the 25/26 school year. I am writing to strongly encourage and ask you to adopt a "bell-to-bell" policy for the sake of our children - their mental health, their social/emotional development, and their academic achievement. As I'm sure you are aware, there is now an abundance of research and evidence regarding phone usage during the critically important developmental stage of our students, and in particular, the impact these devices have when used during school hours. Overwhelmingly, the data is very clear - our children deserve better, and we are the ones that can do that for them.

There are a number of resources you can reference for this research, but Jonathan Haidt's recent book, *The Anxious Generation*, has been very informative for my husband and I as we shape our own plans for screen-usage in our home, as well the direction and intention we hope our local school system adapts, and quickly.

Haidt's research highlights a troubling link between the rise of constant phone access and the sharp increase in anxiety, depression, and attention difficulties in adolescents. He emphasizes that young people today are part of the first generation to grow up with constant digital distractions and it isn't turning out well for them - since 2010, rates of teen anxiety and depression in the U.S. have more than doubled—closely mirroring the explosion in smartphone and social media use.

I believe that a bell-to-bell policy could help mitigate these issues by allowing students, at the very least, to re-engage with in-person learning and peer interaction without the distraction of these devices. Research both nationally and internationally shows that test scores improve, student mental health improves, bullying decreases, and student misbehavior declines. Not to mention the face-to-face interactions that allow our students to develop strong interpersonal social and emotional skills that will serve them for the remainder of their lives are significantly improved.

While we understand that technology plays an important role in education, it's critical that we distinguish between tools that support learning and tools that distract from it. Personal devices are not educational necessities in the classroom—and in many cases, they undermine the focus and social development that schools are meant to foster.

I ask the board to review the research and consider adopting a bell-to-bell personal device policy to create a healthier and more focused learning environment for all students.

Thank you for your time and commitment to the well-being of our students.

Sincerely,

Crystal Basham

[redacted]

Parent/Community Member

Email from Allyson Lifsey sent on May 16, 2025 – Allyson is on the Technology Use Committee

Hello,

My name is Ally Lifsey. I'm the mom of a [redacted] and also a member of the newly-formed WCS Screen Time Committee which I'm excited to be a part of. However, I'm aware that Tennessee's new law requires a policy addressing personal tech in schools prior to the 2025-2026 school year, and we won't have time to deliver guidance via the committee prior to then. Given these time constraints, I'm reaching out to personally advocate for a bell-to-bell ban on all personal tech devices.

I could write a long e-mail about all the reasons why I believe this is the way to go and ideas for how to implement it and responses to common concerns, but Phone Free Schools has already created an amazing Administrator Toolkit with all the relevant information. I've attached it here. I urge you to carefully look it over and consider it when drafting your policy for the upcoming school year.

I'm passionate about making sure that what we do in school is evidence-based to the extent that it can be, and we now have a lot of data that we didn't have before about technology and its effects on our kids. Given this information, it's our duty to change our approach.

Thanks for considering,
Ally

Warren County Board of Education

Monitoring:	Descriptor Term:	Descriptor Code:	Issued Date:
Review: Annually, in March	**Restrictions on Student Possession and Use of Personal Electronic Devices**	**6.312**	**07/24/25**
		Rescinds: **6.312**	Issued: **06/24/24**

The increase in use of cell phones and personal communication devices by students during the school day has become far more than a distraction in the school environment. These devices are being used by students as a means of cheating on tests, taking inappropriate pictures and videos of students and staff for sharing and posting across the internet, threatening and/or bullying other students, and engaging in an excessive amount of social interaction during instructional time.

Therefore, students may only possess a wireless communication device so long as such devices are turned off and stored out of sight and in school issued storage locations for the entirety of the school day. Such devices include any portable wireless device that has the capability to provide voice, messaging, or other data communication between two (2) or more parties, such as wearable technology, cell phones, non-school issued laptops or tablets, and gaming devices.

Students who wish to carry a cell phone with them to and from school must keep the device turned off and stored (e.g., kept in the student's automobile, or other school approved location at all times during the entire school day). For the purposes of this policy the school day includes the entire day from the school start time or bell that indicates the start of the school day until the final dismissal time of the school day. The school is not responsible for any loss or theft of the device while on school property.

A student may only be permitted to utilize a wireless communication device under the following circumstances;

1. In case of emergency;
2. When authorized by a teacher (with prior authorization from principal)
3. To manage the student's health, as document in the student's individual healthcare plan;
4. When the possession or use is required by the student's individual education program, 504 plan or individual learning plan; or
5. When the device is being used by a student with a disability for the operation of assistive technology to increase, maintain, or improve the student's functional capabilities.[1]

EXAMINATION OF WIRELESS COMMUNICATION DEVICES

A wireless communication device may be subject to search within the parameters set out in WBOE Policy 6.303 and state and federal law. Notice that improperly stored wireless communication devices may be subject to search shall be included in the handbook disseminated to the parents and/or guardians of each student.

CELL PHONE/ELECTRONIC COMMUNICATION DEVICE OFFENSE GUIDELINES

A student found in unauthorized possession of any type of cell phone or personal communication device during the school day shall have the device taken from him or her and kept by the school Principal or designee until the parent is notified. The parent may pick up the device at a time and location designated by the principal at the close of the next school day following the day that the parent received notification or earlier at the principal's discretion. Thereafter, the parent may pick up the device by appointment after the student serves the designated detention. Moreover, for such subsequent violation of this policy, the student shall receive additional consequences in accordance with the district-wide communications device offense guidelines.

AGREEMENT TO RULES AND POLICY

By allowing a student to bring a cell phone or other personal communication device to school, the parent and the student voluntarily agree to abide by these disciplinary rules, restrictions and offense guidelines. The District, its schools, nor its employees assume any responsibility or liability for the loss or damage to any student's personal communication device, or for the unauthorized use of student's personal communication device. takes no responsibility for confiscated items and will not compensate the owner for any lost, stolen, or damaged confiscated items while in the custody of the District or while otherwise on school property.

The Director of Schools (or designee) is responsible for administering this policy which applies to all students in all Warren County schools.

PERSONAL COMMUNICATION DEVICE OFFENSE GUIDELINES

1ST OFFENSE	2ND OFFENSE	3RD OFFENSE	4TH & + OFFENSE
• Device is collected & the offense is documented. • Parent is notified and must pick up device from office • Warning-Student will serve detention for the next offense • Device is collected & the offense is documented • Parent is notified and must pick up device from office	• Device is collected & the offense is documented. • Parent is notified and must pick up device from office • Student is assigned to either 2 days ASD, or 1 week of lunch detention • Device is collected & the offense is documented • Parent is notified and must pick up device from office • 2 days of ASD/EL6 or 1	• Device is collected & the offense is documented. • Parent is notified and must pick up device from office • Student serves 2 days of ISS. • Student is not allowed to bring the device back for the rest of the school year • Device is collected & the offense is	• Device is collected & the offense is documented. • K-5 could result in suspension or other disciplinary action • Device is collected & the offense is documented • Short term suspension – 3 days or less • Alternative placement referral

• Warning-Student will serve detention for the next offense	week of lunch detention	documented • Parent is notified and must pick up device from office • 2 days of ISS • Behavior Contract • Revocation of parking privilege • Restriction of attendance at school-sponsored activities (games, dances, etc.)	

Legal References

1. Public Acts of 2025, Chapter No. 103

Cross References

Code of Conduct 6.300

Williamson County Board of Education

Monitoring:	Descriptor Term:	Descriptor Code:	Issued Date:
Review: Annually, in March	**Use of Wireless Communication Devices**	**6.312**	**06/16/25**
		Rescinds:	Issued:

PURPOSE

This policy is required by Tennessee law and establishes clear and consistent expectations for the possession and use of personal wireless communication devices by K–12 students and will take effect August 1, 2026. Its purpose is to ensure that instructional time and school environments remain free from unnecessary distractions and to promote student engagement, well-being, safety, and a positive school environment.

Research and safety experts agree that limiting device use during the school day:

- ***Improves learning by keeping students focused and engaged.***
- ***Supports well-being by reducing social pressures, bullying, and anxiety.***
- ***Strengthens safety by ensuring students follow staff directions in an emergency. Parents will be notified through the school's emergency communication system. Safety experts caution that parents calling or texting students during an emergency can put students at greater risk by drawing attention to them and disrupting established safety procedures.***

DEFINITION

For purposes of this policy, wireless communication devices include but are not limited to:

- ***Cell phones;***
- ***Smart watches;***
- ***Ear buds / AirPods iPods / MP3 players;***
- ***CD players, Walkmans, or radios;***
- ***Pagers or beepers;***
- ***Handheld electronic games; and***
- ***Non-school issued laptops or tablets or any portable devices capable of communication or gaming.***

GENERAL

K–12 students are prohibited from using personal wireless communication devices during the entire school day (i.e., first bell of the day to last bell of the day), including instructional periods, class transitions, study halls, and lunch time. All devices must remain silenced and stored off the body in:

- ***Backpacks, purses, or similar personal bags;***
- ***Teacher-designated storage areas within the school setting;***

- *Lockers; or*
- *Personal vehicles.*

Devices may not be stored in clothing, pockets, or on the body, as this allows for easy access.

~~Students in grades K-8 may possess wireless communication devices so long as such devices are silenced and not used during the school day. Students in grades 9-12 may possess wireless communication devices so long as such devices are silenced and not used during the school day. Students in grades 9-12 may use a wireless communication device during the student's lunch period. Such devices include any portable wireless device that has the capability to provide voice, messaging, or other data communication between two (2) or more parties, such as wearable technology, cell phones, laptops, tablets, and gaming devices.~~

SCHOOL SETTING

"School setting" includes all areas of the campus or school-sponsored environments during the school day, whether instruction is actively occurring or not, including but not limited to:

- *Classrooms and libraries;*
- *Lunch areas and auditoriums;*
- *Gymnasiums and physical education areas (indoor and outdoor);*
- *Performing arts areas;*
- *Locker rooms;*
- *Administrative offices;*
- *Nurse's office, counseling/medical/psychological spaces; or*
- *Bathrooms School Buses and other district-provided transportation for field trips/travel during school day.*

Leaving class during instructional time to use a device in another school setting is a violation of this policy.

EXCEPTIONS

~~A student may, however, be permitted to utilize a wireless communication device under the following circumstances:~~

Students may use personal communication devices only when:

1. *Authorized by a teacher for a specific educational purpose. A "specific educational purpose" means that the device is being used as a tool directly tied to the learning objectives of the lesson and under active teacher supervision.*

Examples include:

   a. *Accessing a teacher-directed digital resource not otherwise available on school-issued technology.*
   b. *Using translation or accessibility applications as part of instructional activities.*
   c. *Documenting a project, experiment, or performance when directed by the teacher.*

d. Participating in structured class activities (e.g., polling software, classroom response systems) where the teacher requires device access.

Educational purpose does not include:

a. Free or unsupervised internet browsing.
b. Listening to music, playing games, or watching videos unrelated to instruction.
c. Messaging, social media, or personal communication.
d. Using the device as a reward or filler activity in lieu of teacher-directed instruction.

Teacher authorization may not be granted for the purpose of convenience when school-issued devices or classroom materials are available for instructional purposes. Permission to use a personal device is an exception, not the norm, and should be revoked immediately if misused.

2. To manage the student's health, as documented in the student's individual healthcare plan;

3. When the possession or use is required by the student's Individual Education Program (IEP), active 504 plan, or individual learning plan; or

4. The device is being used by a student with a disability for the operation of assistive technology to increase, maintain, or improve the student's functional capabilities.

~~5. In the event of an emergency;~~

~~6. When authorized by a teacher for educational purposes;~~

PROHIBITED USES

Students are prohibited from:

1. Using devices in any manner that threatens academic integrity, disrupts learning, or violates privacy rights.
2. Using devices to cyberbully, harass, or threaten another student.
3. Taking, sending, sharing, viewing, or possessing pictures, text messages, emails, or other material depicting sexual activity, as defined in Tennessee Code Annotated § 39-17-1003 and related statutes (including § 39-17-1002), while the student is on school grounds, at school-sponsored events, or on school buses or vehicles provided by the district.
4. Recording or photographing without consent.
5. Students may not use personal devices to access the internet through unauthorized means (e.g., personal hotspots, VPNs, or circumvention of school network filters).
6. Charging devices using school resources during the school day.

~~*SEARCH AND SEIZURE OF DEVICES*~~

~~*By bringing a device to school, students and parents/guardians acknowledge that the device is subject to search by a school administrator if there is reasonable suspicion that the device contains evidence of a violation of school policy or law. Any search will be conducted in a manner consistent with federal law and Tennessee law (T.C.A. § 49-6-4204 and § 49-6-4205) and will be limited in scope to the*~~

~~*suspected violation. Content or images that violate state or federal law may be referred to law enforcement.*~~

STAFF EXPECTATIONS

Teachers and staff members will consistently and fairly enforce this regulation. Teachers will clearly designate storage areas in classrooms for students who cannot store devices in backpacks, lockers, or purses/bags.

Teachers and staff will not use phone breaks as student rewards.

Teachers and staff should model appropriate device use by refraining from personal use during instructional time.

STUDENT AND FAMILY RESPONSIBILITIES

Bringing a personal wireless communication device to school is strictly optional. These devices are not required for instruction and do not enhance learning during the school day.

Students are solely responsible for any personal wireless communication devices they choose to bring to school or school-sponsored events. The school district will not assume responsible for loss, theft, damage, or unauthorized use of these devices.

CONSEQUENCES

Any visible device during school hours may be confiscated. Confiscated devices will be secured and returned to the student at the end of the school day.

Violations of this policy will result in disciplinary action. Repeated violations will lead to progressive consequences. Final determination of disciplinary measures rests with school administration.

Elementary School

- *First Offense: Device placed in cubby/backpack. Teacher/staff member communicates with student and family, reteaching of expectations. Device goes home with student at end of day.*
- *Second Offense: Device sent to administrator. Administrator communicates with student and family, reteaching of expectations. Device returned to student at end of day.*
- *Third Offense: Device sent to administrator. Administrator communicates with student and family, reteaching of expectations. Parent/guardian required to pick up the device.*

Middle School

- *First Offense: Teacher/staff member redirects student to put device away. Reteaching of expectations. Student stores device away until end of class/day.*
- *Second Offense: Teacher/staff member confiscates device and delivers to administration. Parent notified; parent must pick up device at end of day.*
- *Third Offense: Escalated consequences for non-compliance, which may include loss of privilege (device held in office), demerits, or detention, or in-school suspension.*

High School

- *First Offense: Teacher/staff member redirects student to put device away. Reteaching of expectations. Student stores device away until end of class/day.*
- *Second Offense: Devices confiscated and delivered to administrator who notifies parent and reviews expectations with student. Parent conference held as needed.*
- *Third Offense: Escalated consequences for repeated non-compliance. Focus shifts to addressing pattern of behavior. Examples of escalated consequences include loss of privilege (device held in office), detention, or in-school suspension.*

Additional Consequences (All Grades)

- *Referral to law enforcement may occur if device use involved content or behavior that violates state or federal law.*
- *Progressive consequences beyond the third offense may be applied at the discretion of the school administration in alignment with the Student Code of Conduct.*

~~Unauthorized use of a device may result in confiscation of a student's wireless communication device for the duration of the school day. A student in violation of this policy is subject to disciplinary action.~~

EMERGENCY COMMUNICATION ~~PLAN~~

All staff members have access to communication devices during the school day and may contact the school office in case of an emergency. In an emergency, school staff will initiate established communication protocols to notify parents/guardians by text message, email, and/or phone call. Students will also be permitted to contact a parent/guardian once it is safe to do so under staff direction.

Safety experts strongly caution against parents calling or texting students during an active school emergency, as this can draw attention to students' locations and interfere with their ability to follow safety instructions. Parents are urged to await official communication from the school.

In non-emergency situations, parents/guardians will be contacted by school officials via text message, email, or phone call.

~~In the event of an emergency or possible emergency occurring at the school where the student is enrolled, parent(s)/guardian(s) will be alerted by text message and/or email and/or phone call.~~

Legal References	Cross References
1. Public Acts of 2025, Chapter No. 103	Code of Conduct 6.300

Williamson County Board of Education

Monitoring:	Descriptor Term:	Descriptor Code:	Issued Date:
Review: Annually, in March	**Use of Wireless Communication Devices**	**6.312**	**06/16/25**
		Rescinds:	Issued:

General

Students in grades K-8 may possess wireless communication devices so long as such devices are silenced and not used during the school day. Students in grades 9-12 may possess wireless communication devices so long as such devices are silenced and not used during the school day. Students in grades 9-12 may use a wireless communication device during the student's lunch period. Such devices include any portable wireless device that has the capability to provide voice, messaging, or other data communication between two (2) or more parties, such as wearable technology, cell phones, laptops, tablets, and gaming devices.

A student may, however, be permitted to utilize a wireless communication device under the following circumstances:

1. In the event of an emergency;

2. When authorized by a teacher for educational purposes;

3. To manage the student's health, as documented in the student's individual healthcare plan;

4. When the possession or use is required by the student's Individual Education Program (IEP), active 504 plan, or individual learning plan; or

5. The device is being used by a student with a disability for the operation of assistive technology to increase, maintain, or improve the student's functional capabilities.

CONSEQUENCES

Unauthorized use of a device may result in confiscation of a student's wireless communication device for the duration of the school day. A student in violation of this policy is subject to disciplinary action.

EMERGENCY COMMUNICATION PLAN

In the event of an emergency or possible emergency occurring at the school where the student is enrolled, parent(s)/guardian(s) will be alerted by text message and/or email and/or phone call.

Legal References

1. Public Acts of 2025, Chapter No. 103

Cross References

Code of Conduct 6.300

Williamson County Board of Education

Monitoring:	Descriptor Term:	Descriptor Code:	Issued Date:
Review: Annually, in July	**School Board Norms**	**1.107**	**11/18/24**
		Rescinds: **1.107**	Issued: **11/16/20**

General

The School Board shall adopt an appropriate standard of norms that reaffirms the ways in which Board members conduct business and relate to each other.

The Board Norms shall be reviewed annually.

SCHOOL BOARD NORMS

The Board has adopted principles of courtesy and respect to guide the behavior of its members. These principles are to be considered and observed to the extent practicable by Board members in the conduct of Board business.

Board members should read all Board-related materials and should attend work sessions. Board members should use the work session for in-depth discussion.

Board members should make a request to the Executive Committee to place an item on a work session agenda per Board Policy 1.403, Board Meeting Agendas, before bringing it to the floor of a Board meeting.

Board members should support having a policy reviewed at the next policy committee meeting if that policy was suspended for a Board vote.

Board members should be mindful that statutory authority for the administration and operation of the schools, rests with the Superintendent.

Board members should refer complaints and concerns to the appropriate staff per Board Policy 5.501, Complaints and Grievances and inform the Superintendent of all such referrals.

Board members should-regularly communicate and seek legal and professional advice in the use of social media.

Board members should refer requests for staff reports or research to the Superintendent.

Board members should show courtesy and respect and limit their use of electronic devices at all meetings.

Board members should support having a vote of at least 75% of the sitting Board members in favor of a non-binding resolution before it is presented to the Williamson County legislative delegation.

Cross References

School Board Ethics 1.106

Williamson County Schools Superintendent's Evaluation July 1, 2025 - June 30, 2026

Jason Golden

Superintendent of Schools
Performance Evaluation Guidelines

1. An Annual evaluation of the Superintendent of Schools shall take place in May.

2. The evaluation shall be based on the duties and responsibilities of the Superintendent as set forth by the laws of the State of Tennessee and his contract.

3. The evaluation instrument utilized in this process shall be cooperatively developed by the Board and Superintendent.

4. The evaluation rating scale to be used is as follows:

   5 – Significantly above expectations
   4 – Above expectations
   3 – At expectations
   2 – Below expectations
   1 – Significantly below expectations
   N/A – Not Applicable. Using N/A or leaving the section blank shall not have a negative impact on the evaluation.

5. A satisfactory score will be if the average overall score is 3.00 or above.

6. The Board shall meet with the Superintendent to discuss the evaluation results at the May board meeting. The evaluation shall include a recommendation for improvement in any areas where the Board deems the Superintendent of School's performance to be unsatisfactory or in need of improvement.

7. The Superintendent of Schools shall have the right to make a written or oral response to the evaluation.

Observational Goals: 80%

2025-2026 Annual Goal and Objectives	5 – Significantly Above Expectations	4 – Above Expectations	3 – At Expectations	2 – Below Expectations	1 – Significantly Below Expectations	NA – Not Applicable (Shall not have a negative impact)
<u>Performance Goal 1:</u> Conduct professional salary study and make recommendations that evaluate the competitiveness of compensation across all WCS employee groups. • **Deliverable: Professional salary study document with recommendations.**						

<u>Comments:</u>

2025-2026 Annual Goal and Objectives	5 – Significantly Above Expectations	4 – Above Expectations	3 – At Expectations	2 – Below Expectations	1 – Significantly Below Expectations	NA – Not Applicable (Shall not have a negative impact)
<u>Performance Goal 2:</u> Develop corporate and community partnerships to support new programs or supplement existing budget items. • **Deliverable: Analysis report of current corporate support and action plan for soliciting ongoing/future support.**						

<u>Comments:</u>

2025-2026 Annual Goal and Objectives	5 – Significantly Above Expectations	4 – Above Expectations	3 – At Expectations	2 – Below Expectations	1 – Significantly Below Expectations	NA – Not Applicable (Shall not have a negative impact)
<u>Performance Goal 3:</u> Leverage the Screen Time Committee's recommendations to establish guidelines for student use of technology. • **Deliverable: K-12 Framework with screen time guidelines and developmentally appropriate activities by grade bands.**						

<u>Comments:</u>

2025-2026 Annual Goal and Objectives	5 – Significantly Above Expectations	4 – Above Expectations	3 – At Expectations	2 – Below Expectations	1 – Significantly Below Expectations	NA – Not Applicable (Shall not have a negative impact)
<u>Performance Goal 4:</u> Establish committee to analyze innovative instructional delivery models. • **Deliverable: Committee Report summarizing opportunities, resource and student development implications, and suggested priorities for deeper exploration.**						

<u>Comments:</u>

Demonstrable Characteristics: 20%
(Includes State-Required Elements)

	5 – Significantly Above Expectations	4 – Above Expectations	3 – At Expectations	2 – Below Expectations	1 – Significantly Below Expectations	NA – Not Applicable (Shall not have a negative impact)
Student Achievement						

Board Observational Data Examples:

1. Develops, implements, promotes, and monitors continuous improvement in student achievement by using a variety of appropriate techniques.
2. Applies effective methods of providing, monitoring, evaluating, and reporting student achievement.
3. Establishes curriculum planning to anticipate occupational trends and school-to-career needs.
4. Uses child development and learning theories to create developmentally appropriate curriculum and instruction.

Comments:

	5 – Significantly Above Expectations	4 – Above Expectations	3 – At Expectations	2 – Below Expectations	1 – Significantly Below Expectations	NA – Not Applicable (Shall not have a negative impact)
Board Relationships						

Board Observational Data Examples:

1. Keeps all board members informed on issues, needs and operation of the school system.
2. Offers professional advice to the board on items requiring board action, with appropriate recommendations based on thorough study and analysis.
3. Maintains a high degree of understanding and respect between staff and the board.
4. Supports board policy and actions to the public and staff.
5. Refrains from criticism of members of the board.

Comments:

	5 – Significantly Above Expectations	4 – Above Expectations	3 – At Expectations	2 – Below Expectations	1 – Significantly Below Expectations	NA – Not Applicable (Shall not have a negative impact)
Community Relationships						

Board Observational Data Examples:

1. Is an effective spokesperson for the school system.
2. Models the highest professional standards to the community.
3. Works effectively with public and private agencies.
4. Secures available community resources to help the school district solve problems and achieve goals.
5. Uses public resources and funds appropriately and wisely.
6. Provides opportunities for parental involvement.

Comments:

	5 – Significantly Above Expectations	4 – Above Expectations	3 – At Expectations	2 – Below Expectations	1 – Significantly Below Expectations	NA – Not Applicable (Shall not have a negative impact)
Staff and Personnel Relationships						

Board Observational Data Examples:

1. Delegates authority to staff members appropriately.
2. Offers professional development that is focused on student learning consistent with the school district's vision and goals.
3. Uses technologies in teaching and learning.
4. Provides shared leadership and decision-making opportunities for staff that promotes a climate of collaboration and collegiality.

Comments:

	5 – Significantly Above Expectations	4 – Above Expectations	3 – At Expectations	2 – Below Expectations	1 – Significantly Below Expectations	NA – Not Applicable (Shall not have a negative impact)
Facilities, Finance and Human Resources						

Board Observational Data Examples:

1. Demonstrates knowledge of school facilities and develops processes that build internal and public support for facility needs, including bond issues and capital improvement plans.
2. Provides accurate and timely reports to the board on the financial condition of the school system.
3. Ensures that the school plant, equipment, and support systems operate safely, efficiently, and effectively.
4. Develops and monitors long-range plans for school and district technology and information systems and makes informed district decisions about computer hardware and software and staff developing needs while allocating resources consistent with district plan.
5. Demonstrates budget management including financial forecasting, planning, cash flow management, account auditing and monitoring and oversees the district's fiduciary responsibilities.

Comments: