Business, Facilities & Technology Committee Meeting

Wednesday, September 9, 2026 6:00 PM
Board Room, 3000 Donallen Dr, Bensalem, PA 19020

1.	**Call to Order and Roll Call**	**Speaker(s):** Committee Chairperson
2.	**Announcements to the Audience**	**Speaker(s):** Committee Chairperson
3.	**Public Comment #1**	**Speaker(s):** Committee Chairperson
4.	**Business Affairs**	
4.A.	Bond and Capital Reserve Detail and Encumbrance Reports	**Speaker(s):** John Steffy
4.B.	Security Camera Expansion	**Speaker(s):** John Steffy
4.C.	Minuteman Security & Life Safety Quotes	**Speaker(s):** John Steffy
4.D.	Mercury Systems Fire Alarm Services	**Speaker(s):** Kevin Curry
5.	**Facilities Management**	
5.A.	DWD Mechanical Contractors Quote	**Speaker(s):** Mike Dumin
5.B.	Facility Rental Request - Snyder Car Wash	**Speaker(s):** Kevin Curry
6.	**Food Services**	
6.A.	Belmont Hills Elementary School Steamer	**Speaker(s):** Committee Chairperson
6.B.	Food Services Vendors 2026-2027	**Speaker(s):** Committee Chairperson
7.	**Technology**	
7.A.	CDW Government LLC Quote - Adobe Sign	**Speaker(s):** Committee Chairperson
8.	**Transportation**	
9.	**Information/Discussion Items**	
9.A.	Capital Projects	**Speaker(s):** Mike Dumin
9.B.	Next Steps for Correcting Water Infiltration in the Choir Room	**Speaker(s):** Mike Dumin
9.C.	Custodial Supply Savings	**Speaker(s):** Will Roller
9.D.	ICAP	**Speaker(s):** Kevin Curry
9.E.	Cornwells Playground	**Speaker(s):** Kevin Curry
9.F.	LERTA Designation	**Speaker(s):** Committee Chairperson
9.G.	Photography RFP	**Speaker(s):** John Steffy
10.	**Public Comment #2**	**Speaker(s):** Committee

		Chairperson
11.	**Adjournment**	**Speaker(s):** Committee Chairperson

26-27 Capital Reserve Encumbrance Detail

Description	2026-08-31 Amount	2026-07-31 Amount
Hyde Electric, Faust Elementart HVAC upgrade - Electrical Contract Board approved 2023-06-27	15,400.00	15,400.00
Whitemoyer Buick-Vehicles for Facilities - Board approved 2024-02-27	-	-
Miller Flooring Company - supply and install new wrestling mats, remove existing mats - board approved 2024-03-26	-	-
Liberty Doors- Construction of New Entryway and doors to the Top of Main Stairs at BHS- Board Approved 2025-04-22	-	-
All Out Paving- Repaving of Parking Lots at Struble and Faust- Board Approved 2025-04-22	-	-
Carrier Commercial Service- Carrier Compressor and HVAC Repairs at BHS- Board Approved 2025-04-22	-	-
KaTom Restaurant Supply, Inc.- Two Ice Machines at BHS	-	-
McClure Company	-	-
Keystone Floor Products	-	-
Foraker Landscaping - Rain Gardens	-	10,500.00
Corbett, Inc. - Furniture for HS business lab	-	17,951.57
Total Encumbered	**15,400.00**	**43,851.57**

Capital Reserve Funds Uncommitted as of 2026-08-31

Cash Balance as of 1 August 2026	2,984,125
Open Encumbrances as of 1 August 2026	43,852
Available Balance as of 1 August 2026	**2,940,273**
New Expenditures	**0**
Monthly Expenses	**2,663,271**
Revenues	**2,672,885**
Transfers from 2025 Bond Fund for Reimbursement	
Cash Balance as of 31 August 2026	2,993,739
Open Encumbrances as of 31 August 2026	15,400
Available Balance as of 31 August 2026	**2,978,339**

26-27 2026 Bond Funds Encumbrance Detail

Description	2026-08-31 Amount	2026-07-31 Amount
Substitute Teacher Service, Mike Dumin contracted services- Board Approved 2024-06-25	-	13,446.00
Sass-Moore Service Corp- Seresco repairs to Pool HVAC Unit at BHS- Board Approved 2025-10-28	18,000.00	18,000.00
Traffic Products LLC- School Beacon System Renewal for School Zone Flashing Lights-Board Approved 2025-11-25		-
Nextgen Automation, Inc.- Snyder Middle School Controls Upgrade- Board Approved 2026-01-28	62,150.00	62,150.00
Reynolds Energy Services, Inc. d/b/a SitelogicIQ Energy Services, Inc.-Guaranteed Energy Savings Agreement at Rush Elementary-Board Approved 2026-02-25	1,170,521.00	1,170,521.00
Reynolds Energy Services, Inc. d/b/a SitelogicIQ Energy Services, Inc.-Guaranteed Energy Savings Agreement at Rush Elementary-Board Approved 2026-02-25 **AMENDMENT #1**	7,852,741.00	10,502,566.00
Total Encumbered	**$ 9,103,412.00**	**$ 11,766,683.00**

2025 Bond Funds Uncommitted as of 2026-08-31

Cash Balance as of 1 August 2026	16,173,469
Open Encumbrances as of 1 August 2026	11,757,719
Available Balance as of 1 August 2026	**4,415,750**
New Expenditures	**-**
Monthly Expenses	**2,663,271**
Revenues	**43,719**
Cash Balance as of 31 August 2026	13,553,917
Open Encumbrances as of 31 August 2026	9,103,412
Available Balance as of 31 August 2026	**4,450,505**

HARRIS

Phone: 484-261-8200
Email: arosenberg@harristechnologyservices.com
Web: www.harristechnologyservices.com

We have prepared a quote for you

Bensalem Township School District Security Camera Expansion V2

Quote # 007524
Version 3

PREPARED FOR

Bensalem Township School District

John Steffy
jsteffy@bensalemsd.org

Statement of Work

Scope of Work (SOW) for Security Integration Services

This Scope of Work outlines the services and deliverables provided by Harris Technology Services to Bensalem Township School District for implementing and configuring a comprehensive security system.

Overview:

Per the Security Camera Expansion Project document provided by Bensalem Township School District.

- **Technical Specifications & Basis of Design, Grant Funding Proposal (August 2026)**

Security Camera Systems (CCTV / IP Surveillance)

1. **Design and Planning**
    - Site assessment for camera placement.
    - Camera type selection.
    - Network infrastructure assessment for IP camera connectivity.
2. **Installation and Configuration**
    - HTS to provide and install (41) Hanwha cameras per attached plans.
        - Camera models and necessary mounts / POE injectors as noted on following products pages.
    - HTS to provide and run (41) Cat6 lines for cameras and viewing stations.
        - Cat6 lines to be open air plenum cabling.
        - Does not include conduit, raceways or pathways.
    - HTS to terminate cabling at network switches.
        - Existing switches to be used. Client to provide open ports.
        - Client to provide network configuration for camera system with HTS coordination.
    - Owner is responsible for base power. Any required high voltage work can be coordinated through HTS and will be a separate quote.
    - HTS to integrate with existing security system.
    - Camera licensing included in this proposal is for a total of 18 cameras. Customer has existing licenses.
3. **System Integration and Training**
    - Connectivity testing and calibration.
    - Setup of remote viewing, monitoring and recording.

Responsibilities

Security Integrator Responsibilities:

- Deliver all equipment, installation, configuration, and testing.
- Provide training and documentation.
- Maintain adherence to safety and security standards.

Client Responsibilities:

- Access control setup and user credentials to be provided in excel format. If not available, HTS will assist in setup for an additional fee.
- Cabling (if existing) is in place and accessible. If cable is to be installed by provider, cable paths are defined and free of major obstacles.
- Provide access to all areas where products are to be installed.
- Provide room for installation and training.
- Provide any licensing (Microsoft, Zoom, etc.) 72 hours in advance of installation (if applicable).
- Provide IT assistance for IP addresses and network questions as needed. If you do not have an on-site IT employee, the contracted installer requires a pre-meeting with your 3rd Party IT provider.
- Provide contractor ID badge for all technicians (if required).
- Provide a staging area or room for technicians.
- Provide network configuration and management of devices on customer network (if applicable).
- Provide access to service entrances, elevators, etc. where they are required.
- Provide parking for oversized installation vehicles.
- Provide adequate space for the disposal of boxes and trash from the installation.
- Provide designated point of contact for project responsible for planning and coordination.
- Provide a schedule of black-out dates for installation prior to project start date.
- Ensure compliance with security policies.
- Assign personnel for training and ownership.

Installation:

- Includes labor and materials for installation.
- Installation is non-union and non-prevailing wage.
- Lift not included.
- HTS to assist with (1) only camera focus / adjustment at initial time of installation.
- Installation to occur during normal business hours. HTS is to be provided free and clear access to all device locations. If after-hours become required, additional charges may apply.

Work to be performed during normal business hours, consisting of Monday through Friday, 9A to 5PM. Work outside these hours, not specifically called out in this scope of work, will incur additional fees. All labor quoted is NON-UNION unless specifically called out in this scope of work.

Cabling to be run to nearest IDF. Customer must provide sufficient power and internet to the building that can be used to setup security system. HTS utilizes industry standard CAT6 PoE cabling that has a maximum run of 300' from the IDF or switch location. Beyond this distance, additional power sources, switches, and other types of cabling are required to properly install the system. If installation circumstances differ from from what is explicitly called out in this scope of work, additional charges will be incurred.

Pricing includes (1) mobilization.

- One for combined cable and device installation.
- Where construction progress causes interruptions in workflow necessitating multiple visits for partial scopes of work, additional charges may apply.
- Site must supply secure locked space for tools, materials and equipment.
- Where site requires multiple moves of storage / shanty space, additional charges may apply.

HTS will invoice payment for product upon product shipment. Payment is due within 30 days of issued invoice. Upon payment, project installation will be scheduled. Labor will be invoices in monthly installments against installation progress with final payment due upon completion of project. Returns are subject to approval by HTS within 30 days from the time an invoice is issued. Accepted returns are subject to a 35% restocking fee. Specialty and custom order products are non-refundable. After 30 days, product cannot be returned. Any labor incurred against the executed

contract will be invoiced in full. Any outstanding labor will be credited against final invoice.

Site Conditions are understood to be:

- Back boxes, stub ups, conduit, riders, paths, penetrations by others except where specifically noted otherwise.
- Patching and painting is excluded and is by others.
- Fire alarm relay suppled and installed at access control panel location by others.
- 120-VAC is supplied, installed and terminated by others.

Change Orders
Any changes to this agreement shall require an approved change order, which shall modify the scope of work, proposal cost, and timeline of the project. This agreement defines and limits the equipment to be furnished as part of this proposal. The terms of this agreement govern the entire project, including any potential change order.

Workmanship Warranty:
The contracted installer shall warranty their initial work (labor) for one year from the installation date. This only includes labor related to the specified scope of work for the solution that was originally provided. Work requested to be performed outside the initial scope and work and not related to this workmanship warranty will be chargeable to the customer unless covered by an additional support plan that was purchased at the time of agreement.

Product Warranty:
The product warranty does not include batteries, electrical surges, lightning damage, software upgrades and repairs, communication devices that are no longer supported by communication pathways, obsolete components, and components exceeding manufacturer's useful life. The contracted installer is not the manufacturer of the equipment and other than the labor warranty (above), the Customer agrees to look exclusively to the manufacturer of the equipment for repairs under its warranty coverage, if any. If the customer chooses for additional fee or if covered by a support plan, the contracted installer can provide a labor quote to assist with work related to warrantied products post installation.
The contracted installer makes no express warranties as to any matter whatsoever, including, without limitation to, unless prohibited by law, the condition of the equipment, its merchantability, or its fitness for any particular purpose, and the contracted installer shall not be liable for consequential damages.

Unless otherwise specified, no equipment provided by the contracted installer is represented to be medical grade, FDA approved, or intended for use by a healthcare professional or healthcare facility or to diagnose, treat, cure, or prevent a disease or medical condition. The contracted installer does not represent nor warrant that the system may not be compromised or circumvented, or that the system will prevent any loss by burglary, hold- up, or otherwise; or that the system will in all cases provide the protection for which it is installed.

The contracted installer expressly disclaims any implied warranties, including implied warranties of merchantability or fitness for a particular purpose. The warranty does not cover any damage to material or equipment caused by accident, misuse, attempted or unauthorized repair service, modification, or improper installation by anyone other than the contracted installer. The Customer acknowledges that any affirmation of fact or promise made by the contracted installer shall not be deemed to create an express warranty unless included in this agreement in writing; that the Customer is not relying on the contracted installer's skill or judgment in selecting or furnishing a system suitable for any particular purpose and that there are no warranties which extend beyond those on the face of this agreement, and that the contracted installer has offered additional and more sophisticated equipment for an additional charge which the Customer has declined. The Customer's exclusive remedy for the contracted installer's breach of this agreement or negligence to any degree under this agreement is to require the contracted installer to repair or replace, at the contracted installer's option, any equipment which is non-operational.

This Limited Warranty is independent of and in addition to any service contracted. This Limited Warranty gives you

specific legal rights and you may also have other rights which vary from state to state. If required by law, the contracted installer will procure all permits required by local law and will provide, when requested, a Certificate of Workman's Compensation prior to starting work. Additional charges may apply.

Warranty exceptions: Acts of Nature, vandalism, misuse of system, device causing failure or modification/alteration of devices by non (Installer) personnel.

Elements Beyond the Control of Installer
The schedule of any other contractors involved in this project shall be made in consultation with the contracted installer, and unless otherwise agreed to, shall provide time for the contracted installer to perform their work on an 8-hour day, 40-hour week basis. This proposal does not include provision for the contracted installer to perform overtime work for delays not caused by the installer.

An additional charge to the contract shall be made for any mutually agreed upon overtime. The contracted installer shall not be responsible for delays or default that are occasioned by caused of any kind that are beyond their control, including but not limited to delays or defaults of Architects, the Owner, the Contractor, and Subcontractors, other third parties, civil disorders, labor disputes, and Acts of God.

The contracted installer shall be entitled to equitable adjustments in the amount of the contract for delays caused by anything that is beyond their control.

Third Party Materials
For third party installs in which additional product is needed and those materials or equipment that are included in their proposal become temporarily or permanently unavailable for reasons beyond the control and without the fault of the contracted installer, then in the case of such temporary unavailability, the contracted installer reserves the right to supply and install alternative equipment subject to availability.

Delays
The contracted installer shall not be liable for any delay in the performance of the work resulting from or attributed to acts or circumstances beyond the contracted installer's control, including, but not limited to; acts of God, fire, riots, labor disputes, conditions of the premises, acts or omissions of the purchaser, owner or other contractors, suppliers or subcontractors not instructed by (Installer).

Purchase Agreement Terms

1. The title to any and all products listed on the Sales Order remain with Harris Technology Services (HTS) until full payment is received from client.
2. Invoices are payable upon receipt unless prior written approval is received from the HTS corporate offices.
3. Without prior written approval of HTS you may not assign any of your rights or obligations under this Agreement or allow a lien or encumbrance of any kind to be placed upon any products for which you have not received title free and clear.
4. If payment is not paid when due, you will pay us a late charge of up to 15% of the amount of the payment or $25.00 whichever is greater (or such lesser rate as is maximum rate allowed under applicable law). You also agree to pay $35.00 for each returned check. Restrictive endorsements or additional terms on checks you send to us will not reduce your obligations to us.
5. If payment is not paid when due, we will have the right to take ONE OR MORE of the following actions, in addition to any and all other remedies that may be available to us under the law: (a) cancel this agreement without prior notice or warning to you; (b) file a law suit against you to collect all past due amounts, plus all our reasonable legal costs, including but not limited to reasonable attorneys' fees, reasonable overhead for employee time spent on preparing for suit or attempting to collect payments and mitigate our damages; (c) repossess the Equipment or apply to a court for an order allowing repossession for any Equipment for which you have not received title free and clear.
6. This Agreement, and other terms and conditions that you have acknowledged receipt of by signing this Sales Order, constitute the entire Agreement.

7. As a convenience to you and to further expedite this transaction for you, you agree that a photocopy, electronic image or facsimile of this Agreement which includes a photocopy, electronic image or facsimile of the signatures of both parties shall be as valid, authentic and legally binding as the original version for all purposes and shall be admissible in court as final and conclusive evidence of this transaction and of the execution of this document.

Bensalem High School

Description		Price	Qty	Ext. Price
Installation	**Project Installation**	$22,306.63	1	$22,306.63
QND-8080R 	**Wisenet 5 Megapixel Indoor Network Camera - Color - Dome - White - 65.62 ft Infrared Night Vision - H.265, H.264, MJPEG, H.264M, H.264H - 2592 x 1944 - 3.20 mm- 10 mm Fixed Lens - 3.1x Optical - 30 fps - CMOS - Hanging Mount, Gang Box Mount Corner Mount**	$399.75	19	$7,595.25
PNM-9085RQZ1 	**Wisenet 20 Megapixel Network Camera - Color - Dome - White - TAA Compliant - 98.43 ft Infrared Night Vision - H.265, H.264, MJPEG, H.265H, H.265M, H.265B, H.264B, H.264M, H.264H - 2560 x 1920 - 4.13 mm- 9.40 mm Varifocal Lens - 2.3x Optical - 30 fps - CM**	$2,470.00	4	$9,880.00
SBP-400WMW 	**Hanwha Pole/Wall Mount for Mounting Adapter, Enclosure - White - 44.09 lb Load Capacity - Aluminum**	$214.50	4	$858.00
SBP-156KMW 	**Hanwha Techwin Mounting Adapter for Network Camera - White - Aluminum**	$80.60	4	$322.40
SBP-315C	**Hanwha (SBP315C) Tape Media**	$20.15	4	$80.60
Shipping	**Shipping**	$687.00	1	$687.00
			Subtotal:	$41,729.88

Belmont Hills Elementary School

Description		Price	Qty	Ext. Price
Installation	**Project Installation**	$3,428.57	1	$3,428.57
QND-8080R 	**Wisenet 5 Megapixel Indoor Network Camera - Color - Dome - White - 65.62 ft Infrared Night Vision - H.265, H.264, MJPEG, H.264M, H.264H - 2592 x 1944 - 3.20 mm- 10 mm Fixed Lens - 3.1x Optical - 30 fps - CMOS - Hanging Mount, Gang Box Mount Corner Mount**	$399.75	1	$399.75
QNV-8080R 	**Wisenet 5 Megapixel HD Network Camera - Dome - White - 98.43 ft Infrared Night Vision - MJPEG, H.264, H.265 - 2592 x 1944 - 3.20 mm- 10 mm Zoom Lens - 3.1x Optical - 30 fps - CMOS - Ceiling Mount**	$448.50	2	$897.00

Belmont Hills Elementary School

Description		Price	Qty	Ext. Price
SBP-300WMW1 	**Hanwha Techwin Wall Mount for Network Camera - White - Aluminum**	$52.00	2	$104.00
SBP-140HMW 	**Hanwha Techwin Mounting Adapter for Network Camera - White - Aluminum, Plastic**	$32.50	2	$65.00
SBV-A14B 	**Hanwha Techwin Mounting Box for Camera**	$32.50	2	$65.00
SBP-300BW1 	**Hanwha Mounting Bracket - White - Aluminum**	$34.45	2	$68.90
Shipping	**Shipping**	$84.00	1	$84.00
			Subtotal:	$5,112.22

Benjamin Rush Elementary

Description		Price	Qty	Ext. Price
Installation	**Project Installation**	$2,142.86	1	$2,142.86
QND-8080R 	**Wisenet 5 Megapixel Indoor Network Camera - Color - Dome - White - 65.62 ft Infrared Night Vision - H.265, H.264, MJPEG, H.264M, H.264H - 2592 x 1944 - 3.20 mm- 10 mm Fixed Lens - 3.1x Optical - 30 fps - CMOS - Hanging Mount, Gang Box Mount Corner Mount**	$399.75	2	$799.50
Shipping	**Shipping**	$56.00	1	$56.00
			Subtotal:	$2,998.36

Struble Elementary

Description		Price	Qty	Ext. Price
Installation	**Project Installation**	$1,357.14	1	$1,357.14
QND-8080R 	**Wisenet 5 Megapixel Indoor Network Camera - Color - Dome - White - 65.62 ft Infrared Night Vision - H.265, H.264, MJPEG, H.264M, H.264H - 2592 x 1944 - 3.20 mm- 10 mm Fixed Lens - 3.1x Optical - 30 fps - CMOS - Hanging Mount, Gang Box Mount Corner Mount**	$399.75	1	$399.75

Struble Elementary

Description		Price	Qty	Ext. Price
Shipping	**Shipping**	$28.00	1	$28.00
			Subtotal:	$1,784.89

Valley Elementary

Description		Price	Qty	Ext. Price
Installation	**Project Installation**	$2,142.86	1	$2,142.86
QND-8080R 	**Wisenet 5 Megapixel Indoor Network Camera - Color - Dome - White - 65.62 ft Infrared Night Vision - H.265, H.264, MJPEG, H.264M, H.264H - 2592 x 1944 - 3.20 mm- 10 mm Fixed Lens - 3.1x Optical - 30 fps - CMOS - Hanging Mount, Gang Box Mount Corner Mount**	$399.75	2	$799.50
Shipping	**Shipping**	$56.00	1	$56.00
			Subtotal:	$2,998.36

Robert K. Shafer Middle

Description		Price	Qty	Ext. Price
Installation	**Project Installation**	$7,285.71	1	$7,285.71
QND-7082R 	**Wisenet 4 Megapixel Indoor Network Camera - Color - Dome - White - 65.62 ft Infrared Night Vision - H.265M, H.265H, H.264M, H.264H, MJPEG, H.265, H.264 - 2560 x 1440 - 3.20 mm- 10 mm Varifocal Lens - 3.1x Optical - 30 fps - CMOS - In-ceiling, Flush Mount**	$364.00	8	$2,912.00
Shipping	**Shipping**	$225.00	1	$225.00
			Subtotal:	$10,422.71

Cecelia Snyder Middle

Description		Price	Qty	Ext. Price
Installation	**Project Installation**	$2,357.14	1	$2,357.14
QND-8080R 	**Wisenet 5 Megapixel Indoor Network Camera - Color - Dome - White - 65.62 ft Infrared Night Vision - H.265, H.264, MJPEG, H.264M, H.264H - 2592 x 1944 - 3.20 mm- 10 mm Fixed Lens - 3.1x Optical - 30 fps - CMOS - Hanging Mount, Gang Box Mount Corner Mount**	$399.75	2	$799.50
Shipping	**Shipping**	$56.00	1	$56.00
			Subtotal:	$3,212.64

Additional Licenses

Description	Price	Qty	Ext. Price
WAVE-PRO-16 **Hanwha Techwin License - WAVE VMS 16 IP Camera**	$2,080.00	1	$2,080.00
WAVE-PRO-01 **Wisenet WAVE - Professional License - 1 IP Camera**	$130.00	2	$260.00
		Subtotal:	$2,340.00

Bensalem Township School District Security Camera Expansion V2

Prepared by:

Harris Technology Services

Andrew Rosenberg
484-261-8200
arosenberg@harristechnologyservices.com

Prepared for:

Bensalem Township School District

3000 Donallen Drive
Bensalem, PA 19020-1829
John Steffy
(215) 750-2800
jsteffy@bensalemsd.org

Quote Information:

Quote #: 007524

Version: 3
Delivery Date: 08/31/2026
Expiration Date: 09/24/2026

Quote Summary

Description	Amount
Bensalem High School	$41,729.88
Belmont Hills Elementary School	$5,112.22
Benjamin Rush Elementary	$2,998.36
Struble Elementary	$1,784.89
Valley Elementary	$2,998.36
Robert K. Shafer Middle	$10,422.71
Cecelia Snyder Middle	$3,212.64
Additional Licenses	$2,340.00
Total:	$70,599.06

Taxes, shipping, handling and other fees may apply. We reserve the right to cancel orders arising from pricing or other errors. By signing this agreement, you are bound by the full terms and conditions, available online at: https://www.hts.pro/terms

Harris Technology Services

Signature: _____

Name: Andrew Rosenberg

Title: _____

Date: 08/31/2026

Bensalem Township School District

Signature: _____

Name: John Steffy

Date: _____

MINUTEMAN™
security & life safety

We have prepared a quote for you

Bensalem Township School District Grant - Access Control

Quote # 065407
Version 3

Prepared for:

Bensalem School District

Jonathan Harder
jharder@bensalemsd.org

Scope of Work

SCOPE OF WORK:

Minuteman security is providing this proposal based on a walkthrough with Jonathan Harder and Kevin Curry, following the exact scope of work provided by the school district below in order to meet the expectations and standards, Minuteman Security used COSTAR pricing and PA-Prevailing wage to furnish, install and program the access control security hardware at the below schools locations:

- Belmont Elementary School 5000 Neshaminy Boulevard, Bensalem, PA 19020
- Struble Elementary School 4300 Bensalem Boulevard, Bensalem, PA 19020
- Cornwell's Elementary School 2215 Hulmeville Rd., Bensalem, PA 19020
- Rush Elementary School 3400 Hulmeville Rd., Bensalem, PA 19020
- VMC 1440 Byberry Rd, Bensalem, PA 19020
- Faust Elementary School 2901 Bellview Dr, Bensalem, PA 19020

BELMONT HILLS ELEMENTARY SCHOOL

C-Wing Side Corridor Access Control Installation & Door replacement
Scope of Work
The Contractor shall furnish all labor, materials, equipment, programming, testing, and incidental items necessary to provide a complete and fully operational access control installation.

The work shall include, but is not be limited to, the following:
• Furnish and install one (1) multi-technology RFID access control reader meeting the following minimum performance requirements:
o Compatible with the District's existing S2 NetBox/Mercury access control platform
o Support OSDP v2.2 and Wiegand communications
o Support 125 kHz Proximity, 13.56 Mhz NFC, Bluetooth Low Energy credentials
o IP65 outdoor rated
o Remote firmware updates
o Visual LED status indication
o Accelerometer-based tamper detection
o Basis of Desing
Wavelynx APEX Reader AX-10 / AX-20 Series
• Furnish and install two (2) recessed 1-inch DPDT door position contacts.
• Furnish and install one (1) Passive Infrared Request-to-Exit Detector meeting the following minimum requirements:
o Wrap-around detection pattern
o Adjustable relay time
o Door monitor capability
o Integrated audible alert
o Selectable fail-safe/fail-secure operation
o UL294 listed

o Basis of Design
Bosch DS160 Series
• Provide supervised 1K/2K End-of-Line (EOL) resistors for all door contact.

Scope of Work

• Furnish and install one (1) Passive Infrared Request-to-Exit Detector meeting the following minimum requirements:
o Wrap-around detection pattern
o Adjustable relay time
o Door monitor capability
o Integrated audible alert
o Selectable fail-safe/fail-secure operation
o UL294 listed
o Basis of Design
Bosch DS160 Series
• Furnish and install one (1) Security Terminal Enclosure meeting the following minimum requirements:
o 16-gauge steel construction
o Powder coated finish
o Lift-away hinged door
o Interior terminal identification
o Terminal points rated for 12 AWG conductors
o UL listed
o Basis of Design
Space Age Electronics TC Series
• Furnish and terminate one (1) TSC-20 tamper switch for the terminal enclosure.
• Furnish and install one (1) Managed Access Control Power Supply meeting the following minimum requirements:
o 120 VAC input
o Minimum 150 W output
o Managed lock outputs
o Auxiliary power outputs
o Battery backup
o Fire alarm disconnect
o Low battery protection
o Surge protection
o UL294 listed
o Basis of Design
LifeSafety Power ProWire E6M Series
• Terminate composite cabling within the terminal enclosure and extend wiring to all field devices.
• Interface all access control wiring with the newly installed electrified hardware on the right-hand reverse (RHR) door leaf.
• Provide all required surface raceway, conduit, Wiremold, junction boxes, fittings, connectors, supports, and miscellaneous installation materials required for a complete installation.
• Provide fire stopping and fire-rated sealant at all penetrations in accordance with applicable NFPA and NEC requirements.
• Program the access control system and perform complete operational testing.
• Verify proper operation of all access control functions including:
o Valid credential access (door admit)
o Invalid credential rejection
o Door held open alarm

o Door forced open alarm
• Coordinate all work with the Owner to minimize disruption to school operations.

Scope of Work

• Remove all installation debris and leave the work area in clean condition.
• Provide all labor, materials, equipment, wiring, programming, testing, and commissioning necessary to deliver a complete, fully functional system.

C-Wing Door Replacement

Scope of Work
The Contractor shall furnish all labor, materials, equipment, hardware, and incidental items necessary to remove the existing door assembly and install a complete, fully operational replacement door system.

The work shall include, but is not be limited to, the following:
• Remove and dispose of the existing door, frame, and associated hardware.
• Furnish and install one (1) new FRP door frame, 2" x 4-1/2", complete with integral door stop.
• Furnish and install one (1) pair of FRP doors, color to be selected by the Owner.
• Provide recessed door pulls on both door leaves.
• Prepare the right-hand reverse (RHR) door for installation of an electric power transfer (EPT).
• Provide narrow vision lites in accordance with manufacturer requirements.
• Furnish and install one (1) 1-inch clear tempered glass vision kit.
• Furnish and install one (1) 83-inch A111HD-PT full concealed aluminum continuous geared hinge with 1/8-inch inset.
• Furnish and install one (1) 83-inch A111HD full concealed aluminum continuous geared hinge with 1/8-inch inset.
• Furnish and install two (2) LCN 4040XP heavy-duty door closers with spring cushion arms, TBSRT mounting, aluminum finish.
• Furnish and install one (1) Von Duprin EPT-10 electric power transfer (SP28 finish).
• Furnish and install one (1) Sargent 56-8606 x 106, 30-inch panic device, satin stainless finish (32D).
• Furnish and install one (1) Sargent 8610, 30-inch panic device, satin stainless finish (32D).
• Install one (1) wire loop between the door and frame to accommodate access control wiring.
• Coordinate installation of the electric latch retraction panic device, electric power transfer, and wire loop with the Owner's Security Integrator.
• Security Integrator shall provide power, low-voltage wiring, programming, and integration for electrified hardware. Door Contractor shall coordinate installation to ensure compatibility and proper operation.
• Verify all frame, door, and hardware alignment and make all adjustments required for proper operation.

• Seal all penetrations and repair adjacent finishes disturbed during installation.
• Remove all debris and leave the work area in clean condition.
• Provide all labor, equipment, fasteners, anchors, and miscellaneous materials necessary to deliver a complete and operational door assembly.

Scope of Work

Total Price:

CORNWELLS ELEMENTARY SCHOOL

Door #2 (Exterior Main Entrance).

Scope of Work
The Contractor shall furnish all labor, materials, equipment, programming, testing, and incidental items necessary to provide a complete and fully operational access control installation.

The work shall include, but is not be limited to, the following:
• Furnish and install one (1) Managed Access Control Power Supply meeting the following minimum requirements:
o 120 VAC input
o Minimum 150 W output
o Managed lock outputs
o Auxiliary power outputs
o Battery backup
o Fire alarm disconnect
o Low battery protection
o Surge protection
o UL294 listed
o Basis of Design
LifeSafety Power ProWire E6M Series
• Furnish and install one (1) Life Safety Power EX-T4 battery enclosure complete with three (3) 12V, 18Ah batteries.
• Provide all labor and materials required to permanently hardwire 120VAC from the electrical room to the Janitorial Closet for the new E6 enclosure. Plug-in (J-cord) power connections shall not be permitted.
• Remove the existing E2 enclosure and install the new E6 enclosure, transferring the existing Mercury controller boards into the new enclosure.
• Furnish and install one (1) MR52-S3 interface board to support the addition of the exterior card reader at Door #2.
• Furnish and install one (1) multi-technology RFID access control reader meeting the following minimum performance requirements:
o Compatible with the District's existing S2 NetBox/Mercury access control platform
o Support OSDP v2.2 and Wiegand communications

o Support 125 kHz Proximity, 13.56 Mhz NFC, Bluetooth Low Energy credentials
o IP65 outdoor rated
o Remote firmware updates
o Visual LED status indication
o Accelerometer-based tamper detection
o Basis of Desing

Scope of Work

Wavelynx APEX Reader AX-10 / AX-20 Series
• Furnish and install two (2) recessed 1-inch DPDT door position contacts.
• Furnish and install one (1) Passive Infrared Request-to-Exit Detector meeting the following minimum requirements:
o Wrap-around detection pattern
o Adjustable relay time
o Door monitor capability
o Integrated audible alert
o Selectable fail-safe/fail-secure operation
o UL294 listed
o Basis of Design
Bosch DS160 Series
• Provide supervised 1K/2K End-of-Line (EOL) resistors for all door contact
• Furnish and install one (1) Passive Infrared Request-to-Exit Detector meeting the following minimum requirements:
o Wrap-around detection pattern
o Adjustable relay time
o Door monitor capability
o Integrated audible alert
o Selectable fail-safe/fail-secure operation
o UL294 listed
o Basis of Design
Bosch DS160 Series
• Furnish and install one (1) Security Terminal Enclosure meeting the following minimum requirements:
o 16-gauge steel construction
o Powder coated finish
o Lift-away hinged door
o Interior terminal identification
o Terminal points rated for 12 AWG conductors
o UL listed
o Basis of Design
Space Age Electronics TC Series
• Furnish and terminate one (1) TSC-20 tamper switch within the terminal enclosure.
• Furnish and install composite access control cable between the E6 Life Safety Power enclosure and the Door #2 Terminal Enclosure (approximately 260 feet).
• Terminate composite cabling within the terminal enclosure and extend wiring to all field devices.
• Interface access control wiring with the newly installed electrified hardware on the right-hand reverse (RHR) door leaf.
• Provide all required conduit, surface raceway, Wiremold, junction boxes, fittings, connectors, supports, and miscellaneous installation materials necessary for a complete installation.

• Provide fire stopping and fire-rated sealant at all penetrations in accordance with applicable NFPA and NEC requirements.
• Program, configure, test, and commission the complete access control system.
• Verify proper operation of all access control functions, including valid credential access, invalid credential rejection, door held open alarms, and door forced open alarms.
• Coordinate all work with the Owner to minimize disruption to building operations.
• Provide all labor, materials, equipment, wiring, programming, testing, and commissioning

Scope of Work

required to deliver a complete and fully operational access control system.

Door #2 (Exterior Main Entrance).

Ai-phone Intercom System Upgrade
If accepted by the Owner, the Contractor shall also provide the following work:
• Furnish and install one (1) Aiphone IX-DV video door station with 30-degree wall mounting bracket at the exterior of Door #2.
• Furnish and install two (2) Aiphone IX-MV7-HB master stations within the main office.
• Furnish and install one (1) Aiphone IXW-MAA IP I/O module within the E6 Life Safety Power enclosure.
• Furnish and install CAT6 cabling from the Janitorial IDF cabinet to each new Aiphone device.
• Terminate, test, and certify all CAT6 cabling.
• Interface the Aiphone I/O module with the new Mercury access control board.
• Program, configure, test, and commission the Aiphone intercom system and its integration with the access control system.
• Coordinate with the Owner's Information Technology Department for network switch ports and assignment of IP address, subnet mask, and gateway information.
• Deliver a complete, fully functional, and integrated Aiphone communication system.
• Provide all labor, materials, equipment, wiring, programming, testing, and commissioning required to deliver a complete and fully operational access control system.

Door #2 Main Entrance
• Install electric strike assy, power and integration by security integrator
• (1) Command Access MLRK1-SGT
• (1) Alarm Control - DL-2- Door Cords 18".

Total Price:

FAUST ELEMENTRAY SCHOOL

Door #2 (Main Entrance) and Cafeteria Rear Entrance.

Scope of Work
The Contractor shall furnish all labor, materials, equipment, programming, testing, and incidental items necessary to provide a complete and fully operational access control installation.

The work shall include, but is not be limited to, the following:
• Furnish and install one (1) Managed Access Control Power Supply meeting the following minimum requirements:
o 120 VAC input
o Minimum 150 W output
o Managed lock outputs

Scope of Work

o Auxiliary power outputs
o Battery backup
o Fire alarm disconnect
o Low battery protection
o Surge protection
o UL294 listed
o Basis of Design
LifeSafety Power ProWire E6M Series
• Furnish and install one (1) Life Safety Power EX-T4 battery enclosure complete with three (3) 12V, 18Ah batteries.
• Provide all labor and materials required to permanently hardwire 120VAC power from the electrical room (emergency circuit if available) to the new E6 enclosure. Plug-in (J-cord) power connections shall not be permitted.
• Furnish and install one (1) MP1502 intelligent controller to support the Main Entrance and Cafeteria Rear access-controlled doors.
• Furnish and install one (1) multi-technology RFID access control reader meeting the following minimum performance requirements:
o Compatible with the District's existing S2 NetBox/Mercury access control platform
o Support OSDP v2.2 and Wiegand communications
o Support 125 kHz Proximity, 13.56 Mhz NFC, Bluetooth Low Energy credentials
o IP65 outdoor rated
o Remote firmware updates

o Visual LED status indication
o Accelerometer-based tamper detection
o Basis of Desing
• Wavelynx APEX Reader AX-10 / AX-20 Series
• Furnish and install two (2) recessed 1-inch DPDT door position contacts.
• Furnish and install one (1) surface-mounted armored whip DPDT door contact.
• Furnish and install one (1) Passive Infrared Request-to-Exit Detector meeting the following minimum requirements:
o Wrap-around detection pattern
o Adjustable relay time
o Door monitor capability
o Integrated audible alert
o Selectable fail-safe/fail-secure operation
o UL294 listed
o Basis of Design
Bosch DS160 Series
• Provide supervised 1K/2K End-of-Line (EOL) resistors for all door contact.
• Furnish and install one (1) Passive Infrared Request-to-Exit Detector meeting the following minimum requirements:
o Wrap-around detection pattern
o Adjustable relay time
o Door monitor capability
o Integrated audible alert
o Selectable fail-safe/fail-secure operation
o UL294 listed
o Basis of Design
Bosch DS160 Series

Scope of Work

• Furnish and install one (1) Security Terminal Enclosure meeting the following minimum requirements:
o 16-gauge steel construction
o Powder coated finish
o Lift-away hinged door
o Interior terminal identification
o Terminal points rated for 12 AWG conductors
o UL listed
o Basis of Design
Space Age Electronics TC Series
• Furnish and terminate one (1) TSC-20 tamper switch within each terminal enclosure.
• Furnish and install composite access control cabling between the E6 enclosure and the Main Entrance Terminal Enclosure (approximately 100 feet).
• Furnish and install composite access control cabling between the E6 enclosure and the Cafeteria Rear Terminal Enclosure (approximately 280 feet).
• Terminate composite cabling within each terminal enclosure and extend wiring to all associated field devices.
• Interface access control wiring with the newly installed electrified door hardware at the Main Entrance (Right-Hand Reverse leaf) and Cafeteria Rear Entrance (Left-Hand Reverse leaf).
• Provide all required conduit, surface raceway, Wiremold, junction boxes, fittings, connectors, supports, and miscellaneous installation materials necessary to properly protect and conceal all security wiring.

• Provide fire stopping and fire-rated sealant at all penetrations in accordance with applicable NFPA and NEC requirements.
• Program, configure, test, and commission the complete access control system.
• Verify proper operation of all access control functions, including valid credential access, invalid credential rejection, door held open alarms, and door forced open alarms.
• Coordinate all work with the Owner to minimize disruption to school operations.
• Provide all labor, materials, equipment, wiring, programming, testing, and commissioning required to deliver a complete and fully operational access control system.

Door #5 – Café Exit

Scope of Work
The Contractor shall furnish all labor, materials, equipment, programming, testing, and incidental items necessary to provide a complete and fully operational access control installation.

The work shall include, but is not be limited to, the following:
• Modify the existing exit device to provide electrified latch retraction.
• Install one (1) Command Access MLRK1-SGT motorized latch retraction kit.
• Install one (1) Alarm Controls DL-2, 18-inch door cord.
• Disable the existing dogging feature on the exit device.
• Install one (1) LCN 4040XP-RW/PA-AL heavy-duty door closer with parallel arm bracket and TBSRT mounting, aluminum finish.
• Install one (1) LCN 4040-18 mounting plate, aluminum finish.
• Coordinate installation of the electrified hardware with the Security Integrator for final power connection, programming, and system integration.
• Verify proper operation of the exit device, closer, and electrified latch retraction following

Scope of Work

installation.
• Adjust all hardware as required to ensure smooth operation, positive latching, and code-compliant egress.
• Repair any finishes disturbed during installation and remove all installation debris.
• Coordinate all work with the Owner to minimize disruption to building operations.
• The Security Integrator shall provide all power, low-voltage wiring, programming, and integration for the electrified hardware.
• Provide a complete and fully operational door hardware installation ready for final acceptance.

Total Price:

Rush Elementary School

Door #6 -Exterior Main Entrance

Scope of Work
The Contractor shall furnish all labor, materials, equipment, programming, testing, and incidental items necessary to provide a complete and fully operational access control installation.

The work shall include, but is not be limited to, the following:
• Furnish and install one (1) Managed Access Control Power Supply meeting the following minimum requirements:
o 120 VAC input
o Minimum 150 W output
o Managed lock outputs
o Auxiliary power outputs
o Battery backup
o Fire alarm disconnect
o Low battery protection
o Surge protection
o UL294 listed
o Basis of Design
LifeSafety Power ProWire E6M Series
• Furnish and install one (1) Life Safety Power EX-T4 battery enclosure complete with three (3) 12V, 18Ah batteries.
• Provide all labor and materials required to permanently hardwire 120VAC power from the adjacent electrical panel to the new E6 enclosure. Plug-in (J-cord) power connections shall not be permitted.
• Remove the existing E1 enclosure.
• Furnish and install one (1) MP1502 intelligent controller to support the exterior card reader at Door #6.
• Reconnect the existing interior vestibule card reader to the new Mercury controller.
• Furnish and install one (1) multi-technology RFID access control reader meeting the following

Scope of Work

minimum performance requirements:
o Compatible with the District's existing S2 NetBox/Mercury access control platform
o Support OSDP v2.2 and Wiegand communications

o Support 125 kHz Proximity, 13.56 Mhz NFC, Bluetooth Low Energy credentials
o IP65 outdoor rated
o Remote firmware updates
o Visual LED status indication
o Accelerometer-based tamper detection
o Basis of Desing
Wavelynx APEX Reader AX-10 / AX-20
• SeriesFurnish and install two (2) recessed 1-inch DPDT door position contacts.
• Furnish and install one (1) Passive Infrared Request-to-Exit Detector meeting the following minimum requirements:
o Wrap-around detection pattern
o Adjustable relay time
o Door monitor capability
o Integrated audible alert
o Selectable fail-safe/fail-secure operation
o UL294 listed
o Basis of Design
Bosch DS160 Series
• Provide supervised 1K/2K End-of-Line (EOL) resistors for all door contact and REX device circuits.
• Furnish and install one (1) Security Terminal Enclosure meeting the following minimum requirements:
o 16-gauge steel construction
o Powder coated finish
o Lift-away hinged door
o Interior terminal identification
o Terminal points rated for 12 AWG conductors
o UL listed
o Basis of Design
Space Age Electronics TC Series
• Furnish and terminate one (1) TSC-20 tamper switch within the terminal enclosure.
• Furnish and install composite access control cabling between the E6 enclosure and the Door #6 Terminal Enclosure (approximately 260 feet).
• Terminate composite cabling within the terminal enclosure and extend wiring to all associated field devices.
• Interface access control wiring with the newly installed electrified hardware on the right-hand reverse (RHR) door leaf.
• Provide all required conduit, surface raceway, Wiremold, junction boxes, fittings, connectors, supports, and miscellaneous installation materials necessary to properly protect and conceal all security wiring.
• Provide fire stopping and fire-rated sealant at all penetrations in accordance with applicable NFPA and NEC requirements.
• Program, configure, test, and commission the complete access control system.
• Verify proper operation of all access control functions, including valid credential access, invalid credential rejection, door held open alarms, and door forced open alarms.
• Coordinate all work with the Owner to minimize disruption to school operations.

Scope of Work

Door #6 -Exterior Main Entrance

Aiphone Intercom System Upgrade
If accepted by the Owner, the Contractor shall also provide the following work:
• Furnish and install one (1) Aiphone IX-DVF-HW video door station mounted on the brick wall adjacent to Door #6.
• Furnish and install two (2) Aiphone IX-MV7-HB master stations in the main office.
• Furnish and install one (1) Aiphone IXW-MAA IP I/O module within the E6 Life Safety Power enclosure.
• Furnish and install CAT6 cabling from the Break Room IDF cabinet to each Aiphone device.
• Terminate, test, and certify all CAT6 cabling.
• Interface the Aiphone I/O module with the new Mercury access control controller.
• Program, configure, test, and commission the Aiphone intercom system and its integration with the access control system.
• Coordinate with the Owner's Information Technology Department for network switch ports and assignment of IP address, subnet mask, and gateway information.
• Deliver a complete, fully functional, and integrated Aiphone communication system.

Door #6 – Outer Main Entrance (Far Right Door)
• Modify the existing exit device to provide electrified latch retraction.
• Install one (1) Command Access MLRK1-SGT motorized latch retraction kit.
• Install one (1) Alarm Controls DL-2, 18-inch door cord.
• Coordinate installation of the electrified hardware with the Security Integrator for final power connection, programming, and system integration.
• Verify proper operation of the exit device following installation.
Door #7 – Outer Entrance
• Install one (1) Hanchett Entry Systems 9600 surface-mounted electric rim strike (12/24 VDC, 630 finish).
• Install one (1) 1/2-inch spacer for the electric rim strike.
• Install one (1) Sargent 704ETL right-hand reverse (RHR) keyed lever trim, 32D finish.
• Coordinate installation of the electric strike with the Security Integrator for final power connection, programming, and system integration.
• KESO cylinder and core shall be furnished and installed by others.
• Verify proper alignment and operation of the door, strike, and lever trim to ensure positive latching and secure operation.
• Coordinate all work with the Owner and Security Integrator to minimize disruption to building operations.
• Make all adjustments necessary to ensure proper door operation, hardware alignment, and code-compliant egress.

Total Price:

Vehicle Maintenance Center

Scope of Work

East and West Exterior Entrances

Scope of Work
The Contractor shall furnish all labor, materials, equipment, programming, testing, and incidental items necessary to provide a complete and fully operational access control installation.

The work shall include, but is not be limited to, the following:
• Furnish and install one (1) Managed Access Control Power Supply meeting the following minimum requirements:
o 120 VAC input
o Minimum 150 W output
o Managed lock outputs
o Auxiliary power outputs
o Battery backup
o Fire alarm disconnect
o Low battery protection
o Surge protection
o UL294 listed
o Basis of Design
LifeSafety Power ProWire E6M Series
• Furnish and install one (1) Managed Access Control Power Supply meeting the following minimum requirements:
o 120 VAC input
o Minimum 150 W output
o Managed lock outputs
o Auxiliary power outputs
o Battery backup
o Fire alarm disconnect
o Low battery protection
o Surge protection
o UL294 listed
o Basis of Design
LifeSafety Power ProWire E6M Series
• Provide all labor and materials required to permanently hardwire 120VAC power from the adjacent electrical panel to the new E4 enclosure. Plug-in (J-cord) power connections shall not be permitted.

• Remove the existing access control enclosure and consolidate the existing 24VAC power supplies into the new enclosure.
• Furnish and install one (1) MP1502 intelligent controller to support both exterior entrance card readers.
• Furnish and install one (1) multi-technology RFID access control reader meeting the following minimum performance requirements:
o Compatible with the District's existing S2 NetBox/Mercury access control platform
o Support OSDP v2.2 and Wiegand communications
o Support 125 kHz Proximity, 13.56 Mhz NFC, Bluetooth Low Energy credentials
o IP65 outdoor rated
o Remote firmware updates
o Visual LED status indication
o Accelerometer-based tamper detection
o Basis of Desing

Scope of Work

Wavelynx APEX Reader AX-10 / AX-20 Series
• Furnish and install two (2) recessed 1-inch DPDT door position contacts.
• Furnish and install one (1) Passive Infrared Request-to-Exit Detector meeting the following minimum requirements:
o Wrap-around detection pattern
o Adjustable relay time
o Door monitor capability
o Integrated audible alert
o Selectable fail-safe/fail-secure operation
o UL294 listed
o Basis of Design
Bosch DS160 Series
• Provide supervised 1K/2K End-of-Line (EOL) resistors for all door contact and REX device circuits.
• Furnish and install one (1) Security Terminal Enclosure meeting the following minimum requirements:
o 16-gauge steel construction
o Powder coated finish
o Lift-away hinged door
o Interior terminal identification
o Terminal points rated for 12 AWG conductors
o UL listed
o Basis of Design
Space Age Electronics TC Series
• Furnish and terminate one (1) TSC-20 tamper switch within each terminal enclosure.
• Furnish and install one (1) 9500 Rim Strike at the West Entrance.
• Furnish and install composite access control cabling between the E4 enclosure and both entrance terminal enclosures (approximately 160 feet combined).
• Terminate composite cabling within each terminal enclosure and extend wiring to all associated field devices.
• Interface access control wiring with the newly installed electrified door hardware on the right-hand reverse (RHR) door leaf at each entrance.
• Provide all required conduit, surface raceway, Wiremold, junction boxes, fittings, connectors, supports, and miscellaneous installation materials necessary to properly protect and conceal all security wiring.
• Provide fire stopping and fire-rated sealant at all penetrations in accordance with applicable NFPA and NEC requirements.
• Program, configure, test, and commission the complete access control system.

• Verify proper operation of all access control functions, including valid credential access, invalid credential rejection, door held open alarms, and door forced open alarms.
• Coordinate all work with the Owner to minimize disruption to facility operations.
• Provide all labor, materials, equipment, wiring, programming, testing, and commissioning required to deliver a complete and fully operational access control system.

Total Price:

Scope of Work

Struble Elementary School

Door H (Side Double Door).

Scope of Work
The Contractor shall furnish all labor, materials, equipment, programming, testing, and incidental items necessary to provide a complete and fully operational access control installation.

The work shall include, but is not be limited to, the following:
• Furnish and install one (1) Managed Access Control Power Supply meeting the following minimum requirements:
o 120 VAC input
o Minimum 150 W output
o Managed lock outputs
o Auxiliary power outputs
o Battery backup
o Fire alarm disconnect
o Low battery protection
o Surge protection
o UL294 listed
o Basis of Design
LifeSafety Power ProWire E6M Series
• Provide all labor and materials required to permanently hardwire 120VAC power from the adjacent electrical panel to the existing E4 Life Safety Power enclosure. Plug-in (J-cord) power connections shall not be permitted.
• Furnish and install one (1) MR52-S3 interface board to support the addition of the exterior card reader at Door H.
• Furnish and install one (1) multi-technology RFID access control reader meeting the following minimum performance requirements:
o Compatible with the District's existing S2 NetBox/Mercury access control platform
o Support OSDP v2.2 and Wiegand communications
o Support 125 kHz Proximity, 13.56 Mhz NFC, Bluetooth Low Energy credentials
o IP65 outdoor rated
o Remote firmware updates
o Visual LED status indication
o Accelerometer-based tamper detection
o Basis of Desing

Wavelynx APEX Reader AX-10 / AX-20 Series
• Furnish and install two (2) recessed 1-inch DPDT door position contacts.
• Furnish and install one (1) Passive Infrared Request-to-Exit Detector meeting the following minimum requirements:
o Wrap-around detection pattern
o Adjustable relay time
o Door monitor capability
o Integrated audible alert
o Selectable fail-safe/fail-secure operation
o UL294 listed

Scope of Work

o Basis of Design
Bosch DS160 Series
• Provide supervised 1K/2K End-of-Line (EOL) resistors for all door contact and REX device circuits.
• Furnish and install one (1) Security Terminal Enclosure meeting the following minimum requirements:
o 16-gauge steel construction
o Powder coated finish
o Lift-away hinged door
o Interior terminal identification
o Terminal points rated for 12 AWG conductors
o UL listed
o Basis of Design
Space Age Electronics TC Series
• Furnish and terminate one (1) TSC-20 tamper switch within the terminal enclosure.
• Furnish and install composite access control cabling between the existing E4 Life Safety Power enclosure and the Door H Terminal Enclosure (approximately 240 feet).
• Terminate composite cabling within the terminal enclosure and extend wiring to all associated field devices.
• Interface access control wiring with the newly installed electrified hardware on the right-hand reverse (RHR) door leaf.
• Provide all required conduit, surface raceway, Wiremold, junction boxes, fittings, connectors, supports, and miscellaneous installation materials necessary to properly protect and conceal all security wiring.
• Provide fire stopping and fire-rated sealant at all penetrations in accordance with applicable NFPA and NEC requirements.
• Program, configure, test, and commission the complete access control system.
• Verify proper operation of all access control functions, including valid credential access, invalid credential rejection, door held open alarms, and door forced open alarms.
• Coordinate all work with the Owner to minimize disruption to school operations.
• Provide all labor, materials, equipment, wiring, programming, testing, and commissioning required to deliver a complete and fully operational access control system.

Door #8 – Exit H

Scope of Work
The Contractor shall furnish and install all labor, materials, equipment, hardware, accessories, fasteners, anchors, wiring, and incidental items necessary to provide a complete and fully operational replacement door assembly at Door #8 – Exit H.

The work shall include, but is not be limited to, the following:
• Remove and properly dispose of the existing exterior aluminum door assemblies, hardware, thresholds, hinges, and related components.
• Replace the existing right-side entrance with one (1) pair of medium stile aluminum doors, dark bronze finish, complete with standard pulls, standard mid-rails, preparation for 1-inch insulated glazing, and preparation for an electric power transfer (EPT).
• Replace the existing left-side entrance with one (1) pair of medium stile aluminum doors, dark bronze finish, complete with standard pulls, standard mid-rails, and preparation for 1-inch insulated glazing.
• Install eight (8) pieces of 1-inch insulated clear tempered glass.

Scope of Work

• Install one (1) ABH A111HD-PT, 83-inch full mortise continuous geared hinge with power transfer preparation, dark bronze finish.
• Install three (3) ABH A111HD, 83-inch full mortise continuous geared hinges, dark bronze finish.
• Install one (1) Sargent 56-NB-MD8406 electrified panic device on the right-hand reverse (RHR) door leaf.
• Install one (1) Sargent NB-MD8400 panic device.
• Install two (2) Pemko 171A aluminum thresholds, 1/2-inch x 5-inch x 72-inch, without mounting holes.
• Install one (1) Von Duprin EPT-10 Electric Power Transfer, SP313 finish.
• Wrap the existing door header with custom-fabricated aluminum brake metal to conceal existing closer mounting holes as indicated on the project drawings.
• Coordinate installation of the electrified panic device and electric power transfer with the Owner's Security Integrator. The Security Integrator shall provide power, low-voltage wiring, programming, and system integration.
• Verify proper alignment and operation of all doors and hardware and make all adjustments necessary to ensure smooth operation, positive latching, and code-compliant egress.
• Seal all penetrations and repair adjacent finishes disturbed during installation.
• Remove all debris and leave the work area in clean condition.
• Coordinate all work with the Owner to minimize disruption to building operations.
• Provide a complete, fully operational door assembly ready for final acceptance.

Total Price:

Additional notes:

- Some hardware may have extended lead times. Minuteman will not be held responsible for product delays due to supply chain issues.
- Quote includes 1-year labor warranty on all Minuteman installed hardware.
- Quote includes permit fees (if applicable).
- Quote is valid for 14 days

Minuteman assumes the following will be provided and/or installed by others:

- 110VAC as needed.
- POE/POE+ network switches and patch panels, unless otherwise specified.
- Conduit, conduit installation and back-boxes as needed.
- Coring/building penetrations.
- Rack/wall space will be made available as needed.
- Network Cable and cable installation. *(network jacks for cameras must be within 10' of the associated camera. Additional distances will incur T&M cost increases by MST for cable and possible EMT installation.)*
- Painting and patching as needed.

Minuteman assumes:

- Assumes all work will be completed during normal business hours of Monday - Friday 7:00AM - 5:00PM.
- That there is not a requirement for prevailing wage and or union labor.

Customer Supplied Connections:

- A high-speed internet connection with a static IP address must be provided by the customer at the head-end location for remote access.
- A network connection must be provided at each specified location. An IP address may also be required.

Scope of Work

Equipment Returns & Refunds:

- Any product returned to Minuteman, for any reason, may be subject to restocking fees before a refund can be issued.
- Some manufactures only offer a 30-day return policy. Equipment received beyond 30 days may not be eligible for returns. Customer will be fully responsible for any hardware being returned, for any reason, if the manufacturers return policy is beyond expiration.

Existing Devices:

- This proposal assumes that any & all existing conduit, wire, devices & hardware to be used are in satisfactory condition and meet minimum requirements.
- Replacement, repairs and or changes to equipment will require change order authorization by both the customer & Minuteman Security Technologies, Inc.

Project Exclusions:

- Fire System relay connection (if required).
- Infectious Disease Control Measures.

Other Notes:

- The placement of security devices in the elevator cars requires co-operation with the building's elevator company.
- The cost of all elevator company interface wiring is the responsibility of the customer.

Payment Info:

- Payment Terms: [Net30].
- Progress payments per AIA form will be submitted.
- Final Payment due upon completion of project.

BELMONT HILLS ELEMENTARY SCHOOL

MFG	Part Number	Product Description	Qty	Unit Price	Total Price
Life Safety Power	FPO150/2502C82 D8PE6M1	Unified Power System Networked	1	$986.54	$986.54
Life Safety Power	NLC-BOXED	LifeSafety Power NLC-BOXED OSDP Network Module Boxed Unit	1	$261.67	$261.67
Wavelynx	AX20S-STND	Apex standard single gang reader	1	$360.00	$360.00
GEORGE RISK GRI	DPS-199-12W	Door Position Switch. 1" Recessed DPDT	2	$49.60	$99.20
Life Safety Power	EX-T4-BOXED	LSP Product, Boxed, EXT4, 120 VAC	1	$217.36	$217.36
Tri-Ed	TRI-BD127	Battery Back Up	3	$16.21	$48.63
ADI Pro	0E-MCR21KPK2	Resistor Pack for End of Line, 10-Pack	1	$54.39	$54.39
Approved manufacturers	ACCESSPLENJKT4SHLD	22AWG 12 Conductor + 18AWG 4 Cond. 4 Cables Shiel	250	$1.35	$337.50
MST	Labor - Prevailing Wage (PA)	Prevailing Wage Labor - PA - Installation Technician	22	$169.63	$3,731.86

BELMONT HILLS ELEMENTARY SCHOOL

MFG	Part Number	Product Description	Qty	Unit Price	Total Price
MST	Labor - Prevailing Wage (PA)	Prevailing Wage Labor - PA - Programming/ Commissioning	10	$176.53	$1,765.30
	Door Vendor		1	$23,059.64	$23,059.64
Bosch	DS160	PIR EXIT SENSOR LIGHT GRAY	1	$100.80	$100.80
MST	Labor - Prevailing Wage (PA)	Prevailing Wage Labor - PA - Project Management	10	$185.77	$1,857.70

Subtotal: **$32,880.59**

CORNWELLS ELEMENTARY SCHOOL

MFG	Part Number	Product Description	Qty	Unit Price	Total Price
Life Safety Power	FPO150/2502C82 D8PE6M1	Unified Power System Networked	1	$986.54	$986.54
Life Safety Power	NLC-BOXED	LifeSafety Power NLC-BOXED OSDP Network Module Boxed Unit	1	$261.67	$261.67
Mercury Security Corp.	MR52-S3	Dual Door Module - Supports 2 Readers, 8 Inputs,	1	$704.00	$704.00
Wavelynx	AX20S-STND	Apex standard single gang reader	1	$360.00	$360.00
GEORGE RISK GRI	DPS-199-12W	Door Position Switch. 1" Recessed DPDT	2	$49.60	$99.20
Aiphone	IX-MV7-HB	Network Video Master Station, With 7 Inch Touchscreen, Priv	2	$1,787.20	$3,574.40
Aiphone	IX-DV	Network Video Door Station, Vandal Resistant, Surface Mount	1	$1,448.00	$1,448.00
Aiphone	IXW-MAA	MULTI-PURPOSE INPUT/OUTPUT ADAPTOR, DIN RAIL MOUNTED. 4 CON	1	$889.60	$889.60
Aiphone	MCW-S/A	Desk Stand For Jk Series Master Or Sub-Master	1	$30.40	$30.40
Life Safety Power	EX-T4-BOXED	LSP Product, Boxed, EXT4, 120 VAC	1	$217.36	$217.36
Tri-Ed	TRI-BD127	Battery Back Up	3	$16.21	$48.63
ADI Pro	0E-MCR21KPK2	Resistor Pack for End of Line, 10-Pack	2	$54.39	$108.78
Approved manufacturers	ACCESSPLENJKT4S HLD	22AWG 12 Conductor + 18AWG 4 Cond. 4 Cables Shiel	250	$1.16	$290.00
W Box Technologies	0E-CAT6PWH	CAT6 PLENUM - WHITE	600	$0.38	$228.00
Windy City Wire	727110VNQ-S	Cable 18/2 DIRECT BURIAL	500	$0.40	$200.00

CORNWELLS ELEMENTARY SCHOOL

MFG	Part Number	Product Description	Qty	Unit Price	Total Price
MST	Labor - Prevailing Wage (PA)	Prevailing Wage Labor - PA - Installation Technician	40	$169.63	$6,785.20
MST	Labor - Prevailing Wage (PA)	Prevailing Wage Labor - PA - Programming/ Commissioning	16	$176.53	$2,824.48
Bosch	DS160	PIR EXIT SENSOR LIGHT GRAY	1	$100.80	$100.80
	Door Vendor		1	$2,213.33	$2,213.33
MST	Labor - Prevailing Wage (PA)	Prevailing Wage Labor - PA - Project Management	10	$185.77	$1,857.70

Subtotal: **$23,228.09**

FAUST ELEMENTRAY SCHOOL

MFG	Part Number	Product Description	Qty	Unit Price	Total Price
Life Safety Power	FPO150/2502C82 D8PE6M1	Unified Power System Networked	1	$986.54	$986.54
Life Safety Power	NLC-BOXED	LifeSafety Power NLC-BOXED OSDP Network Module Boxed Unit	1	$261.67	$261.67
Genetec	MP1502	GENETEC MP1502 Intelligent Controller	1	$1,400.00	$1,400.00
Wavelynx	AX20S-STND	Apex standard single gang reader	1	$360.00	$360.00
GEORGE RISK GRI	DPS-199-12W	Door Position Switch. 1" Recessed DPDT	2	$49.60	$99.20
Locknetics	7766	7766 Magnetic Door Position Switch	1	$304.80	$304.80
Life Safety Power	EX-T4-BOXED	LSP Product, Boxed, EXT4, 120 VAC	1	$217.36	$217.36
Tri-Ed	TRI-BD127	Battery Back Up	3	$16.21	$48.63
ADI Pro	0E-MCR21KPK2	Resistor Pack for End of Line, 10-Pack	1	$54.39	$54.39
Approved manufacturers	ACCESSPLENJKT4SHLD	22AWG 12 Conductor + 18AWG 4 Cond. 4 Cables Shiel	250	$1.16	$290.00
MST	Labor - Prevailing Wage (PA)	Prevailing Wage Labor - PA - Project Management	10	$185.77	$1,857.70
MST	Labor - Prevailing Wage (PA)	Prevailing Wage Labor - PA - Installation Technician	34	$169.63	$5,767.42
MST	Labor - Prevailing Wage (PA)	Prevailing Wage Labor - PA - Programming/ Commissioning	16	$176.53	$2,824.48
Bosch	DS160	PIR EXIT SENSOR LIGHT GRAY	1	$135.49	$135.49

FAUST ELEMENTRAY SCHOOL

MFG	Part Number	Product Description	Qty	Unit Price	Total Price
	Door Vendor		1	$7,012.39	$7,012.39
				Subtotal:	**$21,620.07**

Rush Elementary School

MFG	Part Number	Product Description	Qty	Unit Price	Total Price
Life Safety Power	FPO150/2502C82 D8PE6M1	Unified Power System Networked	1	$986.54	$986.54
Life Safety Power	NLC-BOXED	LifeSafety Power NLC-BOXED OSDP Network Module Boxed Unit	1	$261.67	$261.67
Genetec	MP1502	GENETEC MP1502 Intelligent Controller	1	$1,400.00	$1,400.00
Wavelynx	AX20S-STND	Apex standard single gang reader	1	$360.00	$360.00
GEORGE RISK GRI	DPS-199-12W	Door Position Switch. 1" Recessed DPDT	2	$49.60	$99.20
Aiphone	IX-MV7-HB	Network Video Master Station, With 7 Inch Touchscreen, Priv	2	$1,787.20	$3,574.40
Aiphone	IX-DV	Network Video Door Station, Vandal Resistant, Surface Mount	1	$1,448.00	$1,448.00
Aiphone	IXW-MAA	MULTI-PURPOSE INPUT/OUTPUT ADAPTOR, DIN RAIL MOUNTED. 4 CON	1	$889.60	$889.60
Aiphone	MCW-S/A	Desk Stand For Jk Series Master Or Sub-Master	2	$30.40	$60.80
Life Safety Power	EX-T4-BOXED	LSP Product, Boxed, EXT4, 120 VAC	1	$217.36	$217.36
Tri-Ed	TRI-BD127	Battery Back Up	3	$16.21	$48.63
ADI Pro	0E-MCR21KPK2	Resistor Pack for End of Line, 10-Pack	1	$54.39	$54.39
Approved manufacturers	ACCESSPLENJKT4SHLD	22AWG 12 Conductor + 18AWG 4 Cond. 4 Cables Shiel	250	$1.16	$290.00
W Box Technologies	0E-CAT6PWH	CAT6 PLENUM - WHITE	600	$0.38	$228.00
Windy City Wire	727110VNQ-S	Cable 18/2 DIRECT BURIAL	500	$0.40	$200.00
MST	Labor - Prevailing Wage (PA)	Prevailing Wage Labor - PA - Project Management	10	$185.77	$1,857.70
MST	Labor - Prevailing Wage (PA)	Prevailing Wage Labor - PA - Installation Technician	40	$169.63	$6,785.20
MST	Labor - Prevailing Wage (PA)	Prevailing Wage Labor - PA - Programming/ Commissioning	10	$176.53	$1,765.30

Rush Elementary School

MFG	Part Number	Product Description	Qty	Unit Price	Total Price
Bosch	DS160	PIR EXIT SENSOR LIGHT GRAY	1	$135.49	$135.49
	Door Vendor		1	$7,222.76	$7,222.76

Subtotal: **$27,885.04**

Vehicle Maintenance Center

MFG	Part Number	Product Description	Qty	Unit Price	Total Price
Life Safety Power	FPO150/2502C82 D8PE6M1	Unified Power System Networked	1	$986.54	$986.54
Life Safety Power	NLC-BOXED	LifeSafety Power NLC-BOXED OSDP Network Module Boxed Unit	1	$279.55	$279.55
Genetec	MP1502	GENETEC MP1502 Intelligent Controller	1	$1,400.00	$1,400.00
Wavelynx	AX20S-STND	Apex standard single gang reader	1	$398.08	$398.08
GEORGE RISK GRI	DPS-199-12W	Door Position Switch. 1" Recessed DPDT	2	$40.30	$80.60
Life Safety Power	EX-T4-BOXED	LSP Product, Boxed, EXT4, 120 VAC	1	$217.36	$217.36
Tri-Ed	TRI-BD127	Battery Back Up	3	$16.21	$48.63
ADI Pro	0E-MCR21KPK2	Resistor Pack for End of Line, 10-Pack	1	$54.39	$54.39
Approved manufacturers	ACCESSPLENJKT4SHLD	22AWG 12 Conductor + 18AWG 4 Cond. 4 Cables Shiel	250	$1.16	$290.00
MST	Labor - Prevailing Wage (PA)	Prevailing Wage Labor - PA - Project Management	10	$185.77	$1,857.70
MST	Labor - Prevailing Wage (PA)	Prevailing Wage Labor - PA - Installation Technician	34	$169.63	$5,767.42
MST	Labor - Prevailing Wage (PA)	Prevailing Wage Labor - PA - Programming/ Commissioning	16	$176.53	$2,824.48
Bosch	DS160	PIR EXIT SENSOR LIGHT GRAY	1	$135.49	$135.49
	Door Vendor		1	$1,274.60	$1,274.60

Subtotal: **$15,614.84**

Struble Elementary School

MFG	Part Number	Product Description	Qty	Unit Price	Total Price
Life Safety Power	FPO150/2502C82 D8PE6M1	Unified Power System Networked	1	$986.54	$986.54

1025 Thomas Drive
Warminster, PA 18974
https://www.minutemanst.com

MINUTEMAN™
security & life safety

Struble Elementary School

MFG	Part Number	Product Description	Qty	Unit Price	Total Price
Life Safety Power	NLC-BOXED	LifeSafety Power NLC-BOXED OSDP Network Module Boxed Unit	1	$261.67	$261.67
Mercury Security Corp.	MR52-S3	Dual Door Module - Supports 2 Readers, 8 Inputs,	1	$704.00	$704.00
Wavelynx	AX20S-STND	Apex standard single gang reader	1	$360.00	$360.00
GEORGE RISK GRI	DPS-199-12W	Door Position Switch. 1" Recessed DPDT	2	$49.60	$99.20
Life Safety Power	EX-T4-BOXED	LSP Product, Boxed, EXT4, 120 VAC	1	$217.36	$217.36
Tri-Ed	TRI-BD127	Battery Back Up	3	$13.17	$39.51
ADI Pro	0E-MCR21KPK2	Resistor Pack for End of Line, 10-Pack	1	$44.19	$44.19
Approved manufacturers	ACCESSPLENJKT4SHLD	22AWG 12 Conductor + 18AWG 4 Cond. 4 Cables Shiel	250	$0.94	$235.00
MST	Labor - Prevailing Wage (PA)	Prevailing Wage Labor - PA - Project Management	10	$185.77	$1,857.70
MST	Labor - Prevailing Wage (PA)	Prevailing Wage Labor - PA - Installation Technician	26	$169.63	$4,410.38
MST	Labor - Prevailing Wage (PA)	Prevailing Wage Labor - PA - Programming/ Commissioning	10	$176.53	$1,765.30
Bosch	DS160	PIR EXIT SENSOR LIGHT GRAY	1	$135.49	$135.49
	Door Vendor		1	$29,400.00	$29,400.00

Subtotal: **$40,516.34**

1025 Thomas Drive
Warminster, PA 18974
https://www.minutemanst.com

Bensalem Township School District Grant - Access Control

Prepared by:

PA-Warminster

Domenic Gallelli
domenic.gallelli@minutemanst.com

Prepared for:

Bensalem School District

2901 Bellview Drive
Bensalem, PA 19020
Jonathan Harder
(215) 750-2800
jharder@bensalemsd.org

Quote Information:

Quote #: 065407

Version: 3
Delivery Date: 08/13/2026
Expiration Date: 08/19/2026

Quote Summary

Description	Amount
BELMONT HILLS ELEMENTARY SCHOOL	$32,880.59
CORNWELLS ELEMENTARY SCHOOL	$23,228.09
FAUST ELEMENTRAY SCHOOL	$21,620.07
Rush Elementary School	$27,885.04
Vehicle Maintenance Center	$15,614.84
Struble Elementary School	$40,516.34
Total:	**$161,744.97**

Payment Terms: Net 30 Days

Minuteman Security & Life Safety

Signature: _____

Name: Domenic Gallelli

Title: Business Development Manager

Date: 08/13/2026

Bensalem School District

Signature: _____

Name: _____

Date: _____

Minuteman Security & Life Safety T&C's

Sales Agreement Terms & Conditions

These **Sales Agreement Terms & Conditions** (these "Terms & Conditions"), including the terms and conditions below, and any agreement, estimate, proposal, work order, or quote executed in writing pursuant thereto (each a "Proposal" and together with the Terms & Conditions, this "Agreement"), are entered into by and between Minuteman Security Technologies, Inc. ("Minuteman") and the customer listed on a Proposal ("Customer") and are subject to the laws in effect in the State in which it has been signed and executed.

SERVICES: This Agreement constitutes an offer to Customer for performance of installation, repair, and associated services listed in the applicable Proposal (the "Services") for certain equipment provided by Minuteman pursuant to the Proposal (the "System") upon the terms and conditions stated herein, and constitutes a binding contract between Customer and Minuteman upon Customer's acceptance of a Proposal. Upon acceptance, this Agreement, together with all documents referenced herein, shall constate the complete and exclusive agreement between the parties, superseding all other prior oral and written agreements. No modifications, alterations, additions or change orders shall be binding or enforceable unless approved in writing by both parties. For the avoidance of doubt, any terms and conditions listed in Customer's purchase order, confirmation, communications, or otherwise shall not apply to this Agreement and are hereby rejected by Minuteman.

PRICE: In consideration for the performance of the Services, Customer shall pay Minuteman the amount set forth in the Proposal (the "Price"), subject to any modifications in a Change Order (as defined below). Customer authorizes Minuteman to obtain labor and materials in accordance with the Price and the specifications set forth herein to accomplish the Services. Unless otherwise set forth in the Proposal, the Price does not include permits, licenses, sales tax, bonds, or shipping costs .

CHANGE ORDER: The parties may request changes in the Services consisting of reasonable additions, deletions or modifications pursuant to a written change order signed by both parties ("Change Order"). Such requested changes shall not be binding on Minuteman until accepted by Minuteman in a written Change Order. All reasonable and mutually agreed upon changes in the Services and corresponding changes in payments and deadlines shall be authorized by Customer in writing.

PAYMENT: Unless alternate payment terms are set forth in a Proposal, all amounts due hereunder are NET thirty (30) days of the date printed on the invoice. Minuteman may require a deposit in its sole discretion. To the extent permitted by applicable law, any unpaid amounts not received within seven (7) days from Minuteman' completion of the Services shall be subject to interest at the rate of 1.5% per month, or the maximum rate permitted by applicable law, whichever is less. Customer shall reimburse Minuteman for any interests, costs incidental to collection and attorney's fees incurred in the collection of past due amounts. Minuteman may suspend the Services in the event that Customer fails to timely pay any invoiced amount.

MOBILIZATION AND PROGRESS BILLING: Unless otherwise specified in the Proposal, Customer shall pay Minuteman in accordance with the following invoicing schedule: (i) an initial mobilization invoice equal to thirty percent (30%) of the Price shall be issued upon execution of the Proposal and shall be due prior to the commencement of Services. (ii) invoices for the balance of all equipment and materials shall be issued upon receipt of such items by Minuteman and shall be due in accordance with the terms set forth herein; and (iii) progress invoices for labor shall be issued monthly, based on the percentage of completion of the Services and as determined by Minuteman with reasonable discretion.

BILL AND HOLD: Customer may request that Minuteman invoice for and hold in its possession, certain equipment or materials purchased for the Project ("Bill and Hold Arrangement"). Minuteman may, in its sole discretion, agree to such request provided that all of the following conditions are satisfied: (i) Customer provides a written request confirming the need for a Bill and Hold Arrangement and acknowledging that billing will occur prior to delivery; (ii) the Bill and Hold Arrangement is established for a substantive business reason; (iii) the equipment and materials subject to the Bill and Hold Arrangement are specifically identified as belonging to Customer and are segregated from Minuteman's general inventory; (iv) the equipment and materials are complete, ready for physical transfer to Customer and available for delivery at Customer's request; and (v) Minuteman does not retain the ability to use or substitute the equipment and materials or direct them to another customer. Upon Minuteman's issuance of an invoice under a Bill and Hold Arrangement, Customer acknowledges and agrees that all risks of ownership, transfer to the Customer as of the invoice date.

PRE-LIEN NOTICE: MINUTEMAN HEREBY PROVIDES NOTIFICATION THAT ANY PERSON OR MINUTEMAN (INCLUDING MINUTEMAN) SUPPLYING LABOR OR MATERIAL FOR THIS IMPROVEMENT TO YOUR PROPERTY MAY FILE A LIEN AGAINST THE PROPERTY WHERE SERVICES ARE PERFORMED IF THAT PERSON OR MINUTEMAN IS NOT PAID FOR THE CONTRIBUTIONS. Upon a default in payment, a lien may be placed on the property and charges will be added from the date of substantial completion at the maximum rate allowed by law.

SCHEDULING: Customer acknowledges and agrees that any dates for performance of the Services set forth in a Proposal are estimates, and that Minuteman reserves the right to reschedule without additional charge to Customer, except as otherwise set forth herein. Customer will be responsible if any interruption of

Minuteman Security & Life Safety T&C's

Minuteman's Services results from Customer's failure to provide reasonable access or due to the acts of negligence of others not under Minuteman' direction.

TERMINATION: Minuteman may terminate this Agreement in the event of Customer's breach of any of its obligations, provided that Customer fails to cure such breach within thirty (30) days from Minuteman's written notice of the breach. In the event of Minuteman's termination for Customer's breach, Minuteman shall be entitled to collect from Customer all amounts for Services performed up to the date of termination, plus any amounts for non-returnable or non-refundable materials or contracts, and any demobilization costs. Minuteman may suspend its Services if there is any safety issue or if Customer fails to cooperate with Minuteman.

OPERATION: Customer shall be responsible for: (i) properly testing and setting the System on every closing and to properly turn off the System on each opening (if applicable); (ii) testing any detection device, or other electronic equipment designated in the Proposal prior to setting the System for closed periods; (iii) notifying Minuteman promptly if such equipment fails to respond to the test; and (iv) using and operating the System and the equipment properly and in accordance with proper operating procedures. Whenever Minuteman employees or authorized representatives are sent to the Customer's premises in response to a service call or alarm signal caused by the Customer improperly following operating instructions or failing to close or properly secure a protected point, Customer shall pay an additional service charge at Minuteman's prevailing rate per occurrence.

DELAYS; FORCE MAJEURE: Minuteman shall not be liable or responsible to Customer, not be deemed to have defaulted or breached this Agreement, for any failure or delay in fulfilling or performing any terms of this Agreement, however caused, or for interruptions of service caused by strikes, riots, floods, acts of God, fire, earthquake, explosion, government order, law, or action, , national emergency, revolution, insurrection, epidemic, pandemics, restraints or delays affecting carriers or inability or delay in obtaining supplies of adequate or suitable materials, materials, power outage, loss of communication and or other signal transmission lines, or by any event beyond the control of Minuteman.

EXCLUSIONS: Services to be provided by Minuteman pursuant to this Agreement do not include:

- Repair of damage or increase in completion time caused by failure to continually provide a suitable operating environment for the System as prescribed by Minuteman and/or the manufacturer of any equipment used in the System, including, but not limited to, the failure to provide, or the failure of, adequate and regulated electrical power, air conditioning or humidity control; or such special requirements as contained in the Proposal hereto.
- Repair of damage or increase in completion time caused by use of the equipment for other than the ordinary use for which the equipment was designed or purpose for which it was intended.
- Repair of damage, replacement parts (due to other than normal wear) or repetitive service calls caused by the use of unauthorized supplies or equipment.
- Repair of damage or increase in completion time caused by: neglect or misuse, alterations, which shall include, but not be limited to, any deviation from Minuteman's physical, mechanical or electrical machine design; attachments, which are defined as the mechanical, electrical or electronic interconnecting to non-Minuteman equipment and devices not supplied by Minuteman.

ADDITIONAL CHARGES: Unless otherwise specified in the Proposal, service charges for the System are based upon coverage during "normal business hours of operation." Services performed outside this window, or as a result of the failure of the Customer to adhere to the requirements as specified by either the manufacturer or outside the scope of the Agreement, shall be chargeable at Minuteman's prevailing rates. Customer shall not tamper with, adjust, alter, move, remove, or otherwise interfere with equipment without Minuteman's specific permission, nor permit the same by third party. Any work performed by Minuteman to correct Customer's breach of the foregoing obligation shall be paid for by Customer at Minuteman's prevailing rates. Remedial maintenance due to Acts of God or events beyond the control of Minuteman shall be corrected by Minuteman and paid for by Customer at Minuteman's prevailing rates.

Minuteman shall have the right to increase or decrease the rates provided above at any time or times after the expiration of one year from the date Services are provided under this Agreement, upon giving Customer written notice thirty (30) days in advance of the effective date of such increase or decrease.

MINUTEMAN'S LIMITS OF LIABILITY: Customer understands that Minuteman is not an insurer; that Customer is responsible for obtaining insurance for such reasons or purposes, including theft and vandalism, and in such amounts, as Customer shall determine. Customer further understands and agrees that the sums payable hereunder to Minuteman are based upon the value of Services offered and equipment value provided and such sums are not related to the value of property belonging to Customer or to others located on the Customer's premises. To the maximum extent permitted by law, Customer shall not seek indemnity under this Agreement from Minuteman, and specifically waives any rights for indemnity for any damages or losses caused by hazards to customers, invitees, guests, or property of Customer or third parties.

TO THE MAXIMUM EXTENT PERMITTED BY LAW, NEITHER MINUTEMAN NOR ITS AFFILIATES SHALL BE LIABLE FOR CONSEQUENTIAL, INDIRECT,

Minuteman Security & Life Safety T&C's

INCIDENTAL, SPECIAL, EXEMPLARY, PUNITIVE OR ENHANCED DAMAGES, LOST PROFITS OR REVENUES OR DIMINUTION IN VALUE, ARISING OUT OF OR RELATING TO THIS AGREEMENT OR THE UNDERLYING TRANSACTIONS HERETO, REGARDLESS OF (A) WHETHER SUCH DAMAGES WERE FORESEEABLE, (B) WHETHER OR NOT CUSTOMER WAS ADVISED OF THE POSSIBILITY OF SUCH DAMAGES AND (C) THE LEGAL OR EQUITABLE THEORY (CONTRACT, TORT, OR OTHERWISE) UPON WHICH THE CLAIM IS BASED, AND NOTWITHSTANDING THE FAILURE OF ANY AGREED OR OTHER REMEDY OF ITS ESSENTIAL PURPOSE. TO THE MAXIMUM EXTENT PERMITTED BY LAW, MINUTEMAN'S TOTAL LIABILITY ARISING OUT OF OR RELATED TO THIS AGREEMENT AND THE UNDERLYING TRANSACTIONS HERETO SHALL NOT EXCEED THE AMOUNT OF $250.00. CUSTOMER ACKNOWLEDGES AND AGREES THAT THIS LIMITATION OF LIABILITY IS AN ESSENTIAL PART OF THIS AGREEMENT AND FURTHER AGREES THAT THIS LIMITATION OF LIABILITY IS REASONABLE. The payment of this amount shall be Minuteman's sole and exclusive liability regardless of the amount of loss or damage incurred by the Customer.

INDEMNIFICATION: Customer shall indemnify and hold harmless Minuteman, its affiliates, and its and their their trustees, officers, professional staff, employees and agents from and against any loss, damage, claim or liability, including reasonable attorneys' fees (collectively "Liabilities") to the extent that such Liabilities arise from: (i) the negligence or willful misconduct of Customer; (ii) any personal injury, death, and damage to real or personal property arising from Customer; (iii) Customer's violation of applicable laws, rules, or regulations; and (iv) Customer's use of any product, equipment, or System. Customer's obligations as an indemnifying party shall include those claims arising from Customer, its affiliates, and its and their trustees, officers, professional staff, employees or agents.

WARRANTY: The Services provided under this Agreement are subject to a one (1) year warranty as follows:

- What is Covered: This warranty covers any defects in workmanship, including installation, with the exceptions stated below.
- How Long Coverage Lasts: This warranty runs for one year from the date the System was installed.
- What Is Not Covered: This warranty does not cover intentional or misuse or of any of the system components or software. The warranty does not cover damage as a result of acts of god (weather, lighting, floods, storms, etc...) or electric surge.
- What Minuteman Will Do: As Customer's sole and exclusive remedy and Minuteman's sole responsibility and liability, Minuteman will repair any part of the System that is proved to be defective in workmanship. In the event repair is not possible on certain System components, Minuteman will replace said component with similar specification and price.
- How To Get Service: Contact our service department at your nearest service center. A service representative will review your system and take any necessary action to correct problems covered by this warranty.
- How State Law Applies: This warranty gives you specific legal rights, and you may also have other rights which vary from state to state.

Customer acknowledges that the Services and/or System may contain or incorporate products or materials manufactured by a third party ("Third-Party Materials"). Third-Party Materials provided under this Agreement and are not covered by warranties set forth herein; provided, however, Minuteman shall pass through to Customer any warranties given by such third parties for any Third-Party Materials, to the extent permitted by such warranties. If any warranties made or given by such third parties are not assignable, Minuteman shall use commercially reasonable efforts to enable Customer to receive the benefit from such warranties. EXCEPT FOR THE EXPRESS REPRESENTATIONS AND WARRANTIES SET FORTH HEREIN: (I) NEITHER MINUTEMAN NOR ANY PERSON ON MINUTEMAN'S BEHALF HAS MADE OR MAKES ANY EXPRESS OR IMPLIED REPRESENTATION OR WARRANTY WHATSOEVER, EITHER ORAL OR WRITTEN, RELATED TO THE SYSTEMS OR SERVICES, INCLUDING, WITHOUT LIMITATION, ANY WARRANTIES OF DESIGN, MERCHANTABILITY, FITNESS FOR A PARTICULAR PURPOSE, TITLE, OR NON-INFRINGEMENT, THAT THE SYSTEM OR THE SERVICES IT FURNISHES WILL AVERT OR PREVENT SECURITY BREACHES, OR THE CONSEQUENCES THEREFROM, WHETHER ARISING BY LAW, COURSE OF DEALING, COURSE OF PERFORMANCE, USAGE OF TRADE OR OTHERWISE, ALL OF WHICH ARE EXPRESSLY DISCLAIMED; AND (II) CUSTOMER ACKNOWLEDGES THAT IT HAS NOT RELIED UPON ANY REPRESENTATION OR WARRANTY MADE BY MINUTEMAN, OR ANY OTHER PERSON ON MINUTEMAN'S BEHALF, EXCEPT AS SPECIFICALLY PROVIDED HEREIN.

SUBCONTRACTING: Minuteman may subcontract any of its obligations under this Agreement; provided, however, that Minuteman shall not be relieved of any of its obligations under this Agreement by the appointment of such subcontractor.

ASSIGNMENT: Customer may not directly or indirectly assign, transfer, or delegate any of or all of its rights or obligations under this Agreement, voluntarily or involuntarily, including by change of control, merger (whether or not such party is the surviving entity), operation of law, or any other manner, without the prior written consent of Minuteman. Minuteman may freely assign or transfer any of its rights, obligations, or interests of this Agreement without prior written consent of

Minuteman Security & Life Safety T&C's

Customer. Any purported assignment or delegation in violation of this Section shall be null and void.

TARIFF & DUTY ADJUSTMENT CLAUSE: Prices are based on current tariffs and duties. Any increases due to changes in tariffs, duties, or government fees shall be Customer's responsibility. Minuteman reserves the right to adjust pricing and will provide notice before order fulfillment.

THIS QUOTE INCLUDES: Only the items and quantities of devices listed on this quotation. The design is pending approval of authorities having jurisdiction where approval is required. Pre-installation rough-in followed by one site visit for final connection of head-end w/ training if needed and all required testing to be performed during the same visit. Acceptance and testing documentation (when applicable). For alarm systems with a key lock box, if shown on plans the least expensive lock box will be provided unless specified otherwise. Services will be performed during 'normal business hours'. Minuteman may request a network connection in the building to facilitate commissioning and service remotely.

THIS PROPOSAL DOES NOT INCLUDE: Multiple site visits for phased projects unless it was specifically advised of the phasing schedule prior to providing this Proposal. Third party approvals or third-party testing or inspections unless specifically listed. Return visits if other trades could not be coordinated to be present during Minuteman's original site visit. Labeling of devices, controls or any required signs unless specifically listed on the Proposal. Unforeseen existing conditions that were not brought to our attention prior to the Proposal.

IT IS THE CUSTOMER'S RESPONSIBILITY TO: Provide a revised equipment count if the quantities shown are incorrect. Provide a minimum of FIVE business days to schedule. Provide a clean and safe working environment that complies with all OSHA rules and standards. Provide a safe and secure, climate-controlled storage area for tools and the equipment being installed. Provide labeling and any required signs. Provide trash receptacles and pay for all trash removal unless trash removal is specifically listed. Cutting, patching, and painting of any areas affected by the installation unless each of these functions are specifically listed on the quote. If there is a custom annunciator/map or custom control panel, etc. then AutoCAD files must be provided to work from. To pay additional travel and labor costs for any additional unplanned site-visits.

TC-Escalation Clause: Due to recent market volatility and ongoing supply chain issues, Minuteman is incorporating the following clause into all proposals and maintenance contracts: Through no fault of Minuteman, In the event of a delay in product availability or price increase of materials procured by any manufacturer, supplier, reseller, or distributer, the Price, time of completion, or contract requirements shall be adjusted by a Change Order. A change in price of any item of material from our manufacturers, suppliers, resellers, or distributers will be considered between the date of this Agreement and the date of installation. Issuance of a purchase order or signed proposal constitutes acceptance of this clause.

1025 Thomas Drive
Warminster, PA 18974
https://www.minutemanst.com

Standard Maintenance Agreement T&C's

Standard Maintenance Agreement

Levels of Service

Features	Silver	Gold	Platinum
Renewal of Manufacturer Software	Covered	Covered	Covered
Remote Support	Covered	Covered	Covered
Annual Software Maintenance	–	Covered	Covered
Corrective Services (Business Hours)	T&M	Covered	Covered
Emergency Corrective Services (After Hours)	T&M	T&M	Covered
Guaranteed Incident Response Times	–	Covered	Covered
Comprehensive Parts Coverage	–	–	Covered
Annual Preventative Maintenance	–	–	Covered

Silver Tier

Software & License Renewal: Any licenses and software support agreements required by the manufacturer will be managed and renewed throughout the system's lifecycle. This ensures uninterrupted system functionality, assistance from manufacturer support resources, and access to the latest software updates. Any additional licenses required due to system augmentations may be subject to additional fees.

Remote Support: Remote diagnosis and technical assistance will be provided for covered systems using secure access methods approved by Customer's IT department. Remote support includes configuration adjustment, software troubleshooting, and performance verification. Customer is responsible for providing network connectivity, and if proper access cannot be provided through a secure VPN, Minuteman will not be able to offer remote support. If an issue cannot be resolved remotely or if such remote access is unavailable, Minuteman will dispatch qualified personnel to perform on-site corrective action on a mutually agreed schedule.

Emergency System Maintenance and Repairs: Minuteman will provide customer access to on-call technicians outside of normal business hours via our After-Hours Support Number +1 (978) 783-0018. This line is monitored 24 hours a day, 365 days per year and is only intended for critical system failures. Should Minuteman need to deploy resources to the customer site, Silver customers may be subject to additional charges at standard labor rates. Non-emergency service requests should be directed to our website for better routing and customer service.

Gold Tier

Our Gold program includes all features provided through the Silver program, plus the following additional services:

Annual Software Maintenance: Software maintenance will be conducted on an annual basis, including an update to the newest recommended software version, software patching, and firmware updates. Software maintenance will be conducted remotely unless otherwise specified or if secure access cannot be provided. If secure access is unavailable, Minuteman can provide on-site software support, which may be subject to additional charges.

Corrective Services: On-site diagnostic and repair services will be provided to address system issues that cannot be resolved through Remote Support. Corrective Services are intended to restore normal operation of covered systems and may include troubleshooting or software adjustments as required. Information on guaranteed response times can be found below.

Standard Maintenance Agreement T&C's

Incident Response Times: Minuteman will respond to service incidents in accordance with the classification of the request and Customer's selected service tier.

General System Support (Non-Critical): Applies to issues that do not materially affect system functionality or life-safety operations. Services are to be provided during normal business hours.

Gold

Remote: 1 Business Day
On-Site: 3 Business Days

Critical System Support: Applies to issues resulting in significant impairment or total loss of system functionality that impacts safety, security, or compliance.

Gold

Remote: 4 Hours
On-Site: 24-Hours

Platinum Tier

Our Platinum program includes all features provided through the Gold program, plus the following additional services:

Comprehensive Parts Coverage: Comprehensive Parts Coverage is provided for hardware issues that cannot be resolved through troubleshooting or repair. In the event of equipment failure, Minuteman will replace the affected component with the same or equivalent model at no additional cost to the customer. This coverage only applies to equipment installed by Minuteman.

Incident Response Times: Minuteman offers increased response times in our platinum program.

General System Support (Non-Critical) : Applies to issues that do not materially affect system functionality or life-safety operations. Services are to be provided during normal business hours.

Platinum

Remote: 1 Business Day
On-Site: 2 Business Days

Critical System Support : Applies to issues resulting in significant impairment or total loss of system functionality that impacts safety, security, or compliance.

Platinum

Remote: 2 Hours
On-Site: 8 Hours

Annual Preventative Maintenance: Minuteman will provide one (1) Preventative Maintenance visit per year which will include the following services:

- Cleaning and visual inspection of cameras for wear or damage; refocusing and re-aiming as required.
- Testing of video servers for proper recording, playback, and live video functionality.
- Testing of access control doors for correct operation.
- Replacement of batteries exceeding two (2) years of age.
- Testing and visual inspection of intercoms.

Preventative Maintenance only applies to equipment installed by Minuteman and specifically covered under this Agreement. Additional devices will not be included unless otherwise stated. All inspections will be conducted during normal business hours.

Standard Maintenance Agreement T&C's

Following each visit, Minuteman will provide a report outlining any repairs performed and recommended upgrades. Additional requested preventative maintenance visits will be billed on a time-and-material basis.

This Proposal is subject to the Maintenance Agreement Terms & Conditions, attached hereto. Any additional or different terms or conditions proposed by Customer are objected to and are hereby rejected unless specifically approved by Minuteman in writing. By signing Customer acknowledges and agrees that it has read this Proposal and the Maintenance Agreement Terms & Conditions and agrees to be bound by all terms and conditions set forth herein.

Maintenance Agreement Terms & Conditions

These Maintenance Agreement Terms & Conditions (these "Terms & Conditions"), including the terms and conditions below, and any agreement, estimate, proposal, work order, or quote executed in writing pursuant thereto (each a "Proposal" and together with the Terms & Conditions, this "Agreement"), are entered into by and between Minuteman Security Technologies, Inc. ("Minuteman") and the customer listed above ("Customer") and are subject to the laws in effect in the State in which it has been signed and executed.

SERVICES: This Agreement constitutes an offer to Customer for performance of the services listed above (the "Services") upon the terms and conditions stated herein, and constitutes a binding contract between Customer and Minuteman upon Customer's acceptance of a Proposal. Upon acceptance, this Agreement, together with all documents referenced herein, shall constate the complete and exclusive agreement between the parties, superseding all other prior oral and written agreements. No modifications, alterations, additions or change orders shall be binding or enforceable unless approved in writing by both parties. For the avoidance of doubt, any terms and conditions listed in Customer's purchase order, confirmation, communications, or otherwise shall not apply to this Agreement and are hereby rejected by Minuteman.

Price: In consideration of the Services identified above, Customer agrees to pay the total quarterly charge set forth in the Proposal in accordance with the payment terms specified on the invoice. The cost of services does not include permits, licenses, sales tax, shipping costs, or costs for materials and equipment, unless identified in the Proposal.

Payment: Unless alternate payment terms are set forth in a Proposal, all amounts due hereunder are in accordance with the payment terms on the specified invoice. Any unpaid amounts not received within seven (7) days from the due date shall be subject to interest at the rate of 1.5% per month, or the maximum rate permitted by applicable law, whichever is less. Customer shall reimburse Minuteman for any interest, costs, costs incidental to collection and attorney's fees incurred in the collection of past-due amounts. Minuteman reserves the right to suspend this Agreement in the event that the customer fails to pay the owed amount on or before the payment due date.

Renewal: Upon expiration of the Initial Term, this Agreement will automatically renew for consecutive one (1) year terms (each, a "Renewal Term" and collectively with the Initial Term, the "Term") unless either party provides written notice of termination at least sixty (60) days prior to the expiration date of the then current Term. Multi-year agreements may be subject to an annual price increase equal to 5% or the current CPI rate, whichever is lower. Annual price may also be modified if additional hardware is added to the system within 6 months of an annual term beginning. The updated Proposal will be provided to the Customer at least 60 days prior to expiration of the then current Term. Unless the Customer provides written notice rejecting the updated Proposal prior to the renewal date, the updated Proposal will automatically take effect for the next Renewal Term.

Termination: Minuteman may terminate this Agreement in the event of Customer's breach of any of its obligations, if Customer fails to cure such breach within thirty (30) days from Minuteman's written notice of the breach. In the event of Minuteman's termination for Customer's breach, Minuteman shall be entitled to collect from Customer all amounts for Services performed up to the date of termination, plus any amounts for non-returnable or non -refundable materials or contracts, and any demobilization costs. Minuteman may suspend Services if there is any safety issue or if Customer fails to cooperate with Minuteman. In the event of termination of this Agreement for any reason, the Customer shall remain responsible for, and promptly pay to Minuteman, all fees and expenses incurred by Minuteman up to the effective termination date, plus any amounts for non-returnable or non -refundable materials or contracts, and any demobilization costs.

Warranty: Minuteman represents and warrants the Services will materially conform to the requirements of this Agreement at the time of completion. Customer must notify Minuteman of any nonconformance at the time Services are completed, or else Customer is deemed to have accepted the Services. If Customer provides timely notification of nonconforming Services, Minuteman shall, as Customer's sole and exclusive remedy and Minuteman's sole liability and responsibility for non-conforming Services, reperform such Services so that they are conforming Services. EXCEPT FOR THE EXPRESS REPRESENTATIONS AND WARRANTIES SET FORTH HEREIN: (I) NEITHER MINUTEMAN NOR ANY PERSON ON MINUTEMAN'S BEHALF HAS MADE OR MAKES ANY EXPRESS OR

Standard Maintenance Agreement T&C's

IMPLIED REPRESENTATION OR WARRANTY WHATSOEVER, EITHER ORAL OR WRITTEN, RELATED TO THE SERVICES, INCLUDING, WITHOUT LIMITATION, ANY WARRANTIES OF DESIGN, MERCHANTABILITY, FITNESS FOR A PARTICULAR PURPOSE, TITLE, OR NON-INFRINGEMENT, THAT THE SERVICES IT FURNISHES WILL AVERT OR PREVENT SECURITY BREACHES, OR THE CONSEQUENCES THEREFROM, WHETHER ARISING BY LAW, COURSE OF DEALING, COURSE OF PERFORMANCE, USAGE OF TRADE OR OTHERWISE, ALL OF WHICH ARE EXPRESSLY DISCLAIMED; AND (II) CUSTOMER ACKNOWLEDGES THAT IT HAS NOT RELIED UPON ANY REPRESENTATION OR WARRANTY MADE BY MINUTEMAN, OR ANY OTHER PERSON ON MINUTEMAN'S BEHALF, EXCEPT AS SPECIFICALLY PROVIDED HEREIN.

Exclusions: Services to be provided by Minuteman pursuant to this Agreement do not include:

- Repair of damage or increase in completion time caused by failure to continually provide a suitable operating environment for the system as prescribed by Minuteman and/or the manufacturer of any equipment used in the system, including, but not limited to, the failure to provide, or the failure of, adequate and regulated electrical power, air conditioning or humidity control; or such special requirements as contained in the Proposal hereto.
- Repair of damage or increase in completion time caused by use of equipment for other than the ordinary use for which the equipment was designed or purpose for which it was intended.
- Repair of damage, replacement parts (due to other than normal wear) or repetitive service calls caused by the use of unauthorized supplies or equipment.
- Repair of damage or increase in completion time caused by: neglect or misuse, alterations, which shall include, but not be limited to, any deviation from Minuteman's physical, mechanical or electrical machine design; attachments, which are defined as the mechanical, electrical or electronic interconnecting to non-Minuteman equipment and devices not supplied by Minuteman.
- Emergency calls for non-critical issues.
- If persons other than Minuteman representatives perform maintenance or repairs that result in further work for Minuteman, such repairs will be billed on a time and materials basis. This Agreement does not include maintenance or service of customer supplied PCs and Networks. The Customer's IT department may be required to help facilitate maintenance and service of the listed systems.

DELAYS; FORCE MAJEURE: Minuteman shall not be liable or responsible to Customer, nor be deemed to have defaulted or breached this Agreement, for any failure or delay in fulfilling or performing any terms of this Agreement, however caused, or for interruptions of service caused by strikes, riots, floods, acts of God, fire, earthquake, explosion, government order, law, national emergency, revolution, insurrection, epidemic, pandemics, restraints or delays affecting carriers or inability or delay in obtaining supplies of adequate or suitable materials, materials, power outage, loss of communication and or other signal transmission lines, or by any event beyond the control of Minuteman.

MINUTEMAN'S LIMITS OF LIABILITY: TO THE MAXIMUM EXTENT PERMITTED BY LAW, NEITHER MINUTEMAN NOR ITS AFFILIATES SHALL BE LIABLE FOR CONSEQUENTIAL, INDIRECT, INCIDENTAL, SPECIAL, EXEMPLARY, PUNITIVE OR ENHANCED DAMAGES, LOST PROFITS OR REVENUES OR DIMINUTION IN VALUE, ARISING OUT OF OR RELATING TO THIS AGREEMENT OR THE UNDERLYING TRANSACTIONS HERETO, REGARDLESS OF (A) WHETHER SUCH DAMAGES WERE FORESEEABLE, (B) WHETHER OR NOT CUSTOMER WAS ADVISED OF THE POSSIBILITY OF SUCH DAMAGES AND (C) THE LEGAL OR EQUITABLE THEORY (CONTRACT, TORT, OR OTHERWISE) UPON WHICH THE CLAIM IS BASED, AND NOTWITHSTANDING THE FAILURE OF ANY AGREED OR OTHER REMEDY OF ITS ESSENTIAL PURPOSE. TO THE MAXIMUM EXTENT PERMITTED BY LAW, MINUTEMAN'S TOTAL LIABILITY ARISING OUT OF OR RELATED TO THIS AGREEMENT AND THE UNDERLYING TRANSACTIONS HERETO SHALL NOT EXCEED THE AMOUNT OF $250.00. CUSTOMER ACKNOWLEDGES AND AGREES THAT THIS LIMITATION OF LIABILITY IS AN ESSENTIAL PART OF THIS AGREEMENT AND FURTHER AGREES THAT THIS LIMITATION OF LIABILITY IS REASONABLE. The payment of this amount shall be Minuteman's sole and exclusive liability regardless of the amount of loss or damage incurred by the Customer.

INDEMNIFICATION: Customer shall indemnify and hold harmless Minuteman, its affiliates, and its and their trustees, officers, professional staff, employees and agents from and against any loss, damage, claim or liability, including reasonable attorneys' fees (collectively "Liabilities ") to the extent that such Liabilities arise from: (i) the negligence or willful misconduct of Customer; (ii) any personal injury, death, and damage to real or personal property arising from Customer; (iii) Customer's violation of applicable laws, rules, or regulations; and (iv) Customer's use of any product, equipment, or system. Customer's obligations as an indemnifying party shall include those claims arising from Customer, its affiliates, and its and their trustees, officers, professional staff, employees or agents.

SUBCONTRACTING: Minuteman may subcontract any of its obligations under this Agreement; provided, however, that Minuteman shall not be relieved of any of its obligations under this Agreement by the appointment of such subcontractor.

ASSIGNMENT: Customer may not directly or indirectly assign, transfer, or delegate any of or all of its rights or obligations under this Agreement, voluntarily or involuntarily, including by change of control, merger (whether or not such party is the surviving entity), operation of law, or any other manner, without the prior written consent of Minuteman. Minuteman may freely assign or transfer any of its rights, obligations, or interests of this Agreement without prior written consent of Customer. Any purported assignment or delegation in violation of this Section shall be null and void.

IT IS THE CUSTOMER'S RESPONSIBILITY TO: (i) provide a clean and safe working environment that complies with all OSHA rules and standards; (ii) provide

Standard Maintenance Agreement T&C's

labeling and any required signs; (iii) provide trash receptacles and pay for all trash removal unless trash removal is specifically listed; (iv) cut, patch, and paint any areas affected by the Services; and (v) provide AutoCAD files if there is a custom annunciator/map or custom control panel, etc.

MINUTEMAN™
security & life safety

We have prepared a quote for you

Bensalem Township School District Grant - Priority Cameras

Quote # 065320
Version 2

Prepared for:

Bensalem School District

Jonathan Harder
jharder@bensalemsd.org

Scope of Work

SCOPE OF WORK:

Minuteman security is providing this proposal based on a walkthrough with Kevin Curry and Jonathan Harder, Minuteman Security used COSTAR pricing and PA-Prevailing wage to furnish, install and program 16 Hanwha Vision priority cameras at 8 schools locations, per description below:

High School
1 - Area - Loading Dock
Quantity Two: Hanwha Vision PNM-9085RQZ1
Total cable: 255ft Cat6 cable, home run from cameras location to (HS- IDF- 0 1, Room H1 05A).
A – Cam-HS-LD-01: NE corner of the loading dock, adjacent to the Receiving entrance providing coverage of loading dock operations, Exterior Corner Wall Mount.
B – Cam-HS- LD-02: SE corner of the Loading Dock providing coverage of the loading dock approach, Exterior Corner Wall Mount.
2 - Area - G Hallway (Second Floor):
Quantity Six: Hanwha Vision QND-8080 R
Total cable: 650ft Cat6 cable, home run from cameras location to HS- IDF- 02 (Room G206 B)
A – Cam-HS- G- 0 1: SE corridor intersection providing coverage of the west hallway and adjacent corridor. Ceiling Mounted
B – Cam-HS- G- 0 2: Wes t hallway providing continuous corridor coverage. Ceiling Mounted
C – Cam-HS- G- 0 3: Northwest corridor intersection providing overlapping coverage of intersecting hallways Ceiling Mounted
D – Cam-HS- G- 0 4: North hallway providing coverage toward the roof access corridor Ceiling Mounted
E – Cam-HS- G- 0 5: Northeast hallway providing coverage of corridor and adjacent classroom entrances Ceiling Mounted
F - Cam-HS- G- 0 6: Southeast corridor adjacent to the Upper Auditorium providing coverage of hallway intersection and auditorium access. Ceiling Mounted

Belmont Hills Elementary School
1 - Area - Main Entrance / Parent Pickup Loop
Quantity One: Hanwha Vision PNM-9085 RQZ1
Total cable: 225 ft from camera location to MDF closet.
Cam- BEL- 0 1- Main entrance canopy adjacent to A Wing providing multi- directional coverage of the primary entrance> parent pickup/drop-off visitor entrance and front sidewalk, Exterior Corner Wall Mount.

Struble Elementary School
1 - Area - Main Hallway / Administration Corridor
Quantity Two: Hanwha Vision QND-8080 R
Total cable: 250 ft from cameras location to MDF closet.
A – Cam-STR- 0 1- Main hallway adjacent to the Administration Office providing coverage of the primary entrance corridor administration hallway and the kindergarten corridor intersection. (Ceiling Mounted Indoor Dome)
B – Cam-STR- 0 2- Main hallway adjacent to the Cafeteria and Gymnasium providing coverage of the primary corridor intersection serving the cafeteria gymnasium auditorium and classroom wings 1. (Ceiling Mounted Indoor Dome)

Scope of Work

Benjamin Rush Elementary School
1 - Area - Library Corridor / Wing 3 Intersection
Quantity One: Hanwha Vision QND-8080 R
Total cable: 55ft from camera location to MDF closet.
Cam- RSH- 0 1- Corridor intersection adjacent to Room 20 providing coverage of the hallway toward Rooms 42 and 1 9 B including the library corridor intersection. (Ceiling Mounted Indoor Dome)

Samuel K. Faust Elementary School
Area - E Wing Hallway
Quantity One: Hanwha Vision QND-8080 R
Total cable: 85ft from cameras location to IDF closet.
Cam- FST- 0 1- Corridor intersection at the E Wing hallway providing coverage of the corridor toward Rooms 24 and 23 including the adjacent hallway intersection. (Ceiling Mounted Indoor Dome).

Cornwells Elementary School
Area - Gymnasium Exterior / Staff Parking and Parent Pickup Loop
Quantity One: Hanwha Vision PNM-9085 RQZ1
Total cable: 185ft from cameras location to IDF closet.
Cam- CW- 0 1- Exterior wall of the Gymnasium providing multi- directional coverage of the staff parking area, parent pickup/drop- off lane, and southwest building approach. (High Exterior Wall Mount)

Valley Elementary School
1 - Area - Library Corridor / 1st Grade Intersection
Quantity One: Hanwha Vision QND-8080 R
Total cable: 70ft from camera location to IDF closet.
Cam- VAL- 0 1- Corridor intersection adjacent to Room 177 providing coverage of the hallway toward Room 111 and the adjacent corridor/ramp leading toward the south hallway. (Ceiling Mounted Indoor Dome)

Cecelia Snyder Middle School
1 - Area - Main Entrance Vestibule
Quantity One: Hanwha Vision QND-8080 R
Total cable: 95ft from cameras location to IDF closet.
Cam- SNY-1- Main entrance vestibule providing coverage of the interior parent pickup/drop- off vestibule<, main entrance doors and adjacent lobby corridor. (Ceiling Mounted Indoor Dome)

Total priority cameras counts/models:
Quantity Three: Hanwha Vision PNM-9085RQZI
Quantity Thirteen: Hanwha Vision QND-8080 R
Quantity Three: Hanwha Vision SBP-300KMW1 - Corner Mount
Quantity Three: Hanwha Vision SBP-300WMW - Goose Neck Wall Mount
Quantity Three: Hanwha Vision SBP-3015HMW - Hanging Adapter

cable length calculated from the floor plans = 1620ft
+ 10 extra ft of cable for each camera run to safely accommodate the physical drop-down length at the camera mounting point and the slack needed for clean termination =14x10=140ft
Total cable required =1760ft

Scope of Work

Note: Bensalem school district will provide Minuteman Security Technicians with Scissor lift as needed during the installation to reach high cameras locations.

Additional notes:

- Some hardware may have extended lead times. Minuteman will not be held responsible for product delays due to supply chain issues.
- Quote includes 1-year labor warranty on all Minuteman installed hardware.
- Quote includes permit fees (if applicable).
- Quote is valid for 14 days

Minuteman assumes the following will be provided and/or installed by others:

- 110VAC as needed.
- POE/POE+ network switches and patch panels, unless otherwise specified.
- Conduit, conduit installation and back-boxes as needed.
- Coring/building penetrations.
- Rack/wall space will be made available as needed.
- Painting and patching as needed.

Minuteman assumes:

- Assumes all work will be completed during normal business hours of Monday - Friday 7:00AM - 5:00PM.
- That there is not a requirement for prevailing wage and or union labor.

Customer Supplied Connections:

- A high-speed internet connection with a static IP address must be provided by the customer at the head-end location for remote access.
- A network connection must be provided at each specified location. An IP address may also be required.

Equipment Returns & Refunds:

- Any product returned to Minuteman, for any reason, may be subject to restocking fees before a refund can be issued.
- Some manufactures only offer a 30-day return policy. Equipment received beyond 30 days may not be eligible for returns. Customer will be fully responsible for any hardware being returned, for any reason, if the manufacturers return policy is beyond expiration.

Existing Devices:

- This proposal assumes that any & all existing conduit, wire, devices & hardware to be used are in satisfactory condition and meet minimum requirements.
- Replacement, repairs and or changes to equipment will require change order authorization by both the customer & Minuteman Security Technologies, Inc.

Project Exclusions:

- Fire System relay connection (if required).
- Infectious Disease Control Measures.

Other Notes:

- The placement of security devices in the elevator cars requires co-operation with the building's elevator company.
- The cost of all elevator company interface wiring is the responsibility of the customer.

Scope of Work

Payment Info:

- Payment Terms: [Net30].
- Progress payments per AIA form will be submitted.
- Final Payment due upon completion of project.

Hardware

MFG	Part Number	Product Description	Qty	Unit Price	Total Price
Hanwha	PNM-9085RQZ1	Wisenet P series network vandal outdoor Multi-sensor Multi-	3	$2,747.69	$8,243.07
Hanwha	QND-8080R	Wisenet Q network indoor dome camera, 5MP @ 30fps, motorize	13	$444.69	$5,780.97
Hanwha	SBP-300KMW1	Corner Mount Adapter Accessory, use with SBP-300WMW1, White	3	$57.85	$173.55
Hanwha	SBP-300WMW	White Gooseneck mount	3	$57.85	$173.55
Hanwha	SBP-317HM	Hanging mount for PNM-9080VQ PNM-9081VQ (Camera	3	$51.92	$155.76
W Box Technologies	0E-CAT6PWH	CAT6 PLENUM - WHITE	1800	$0.35	$630.00

Subtotal: **$15,156.90**

Labor

Part Number	Product Description	Total Price
Per Diem	Per Diem	$0.00
Labor - Prevailing Wage (PA)	Prevailing Wage Labor - PA - Installation Technician	$20,355.60
Labor - Prevailing Wage (PA)	Prevailing Wage Labor - PA - Programming/ Commissioning	$5,295.90
Labor - Prevailing Wage (PA)	Prevailing Wage Labor - PA - Project Management	$5,944.64

Subtotal: **$31,596.14**

1025 Thomas Drive
Warminster, PA 18974
https://www.minutemanst.com

Bensalem Township School District Grant - Priority Cameras

Prepared by:

PA-Warminster

Domenic Gallelli
domenic.gallelli@minutemanst.com

Prepared for:

Bensalem School District

2901 Bellview Drive
Bensalem, PA 19020
Jonathan Harder
(215) 750-2800
jharder@bensalemsd.org

Quote Information:

Quote #: 065320

Version: 2
Delivery Date: 08/13/2026
Expiration Date: 08/18/2026

Quote Summary

Description	Amount
Hardware	$15,156.90
Labor	$31,596.14
Total:	**$46,753.04**

Payment Terms: Net 30 Days

Minuteman Security & Life Safety

Signature: _____

Name: Domenic Gallelli

Title: Business Development Manager

Date: 08/13/2026

Bensalem School District

Signature: _____

Name: _____

Date: _____

Minuteman Security & Life Safety T&C's

Sales Agreement Terms & Conditions

These **Sales Agreement Terms & Conditions** (these "Terms & Conditions"), including the terms and conditions below, and any agreement, estimate, proposal, work order, or quote executed in writing pursuant thereto (each a "Proposal" and together with the Terms & Conditions, this "Agreement"), are entered into by and between Minuteman Security Technologies, Inc. ("Minuteman") and the customer listed on a Proposal ("Customer") and are subject to the laws in effect in the State in which it has been signed and executed.

SERVICES: This Agreement constitutes an offer to Customer for performance of installation, repair, and associated services listed in the applicable Proposal (the "Services") for certain equipment provided by Minuteman pursuant to the Proposal (the "System") upon the terms and conditions stated herein, and constitutes a binding contract between Customer and Minuteman upon Customer's acceptance of a Proposal. Upon acceptance, this Agreement, together with all documents referenced herein, shall constate the complete and exclusive agreement between the parties, superseding all other prior oral and written agreements. No modifications, alterations, additions or change orders shall be binding or enforceable unless approved in writing by both parties. For the avoidance of doubt, any terms and conditions listed in Customer's purchase order, confirmation, communications, or otherwise shall not apply to this Agreement and are hereby rejected by Minuteman.

PRICE: In consideration for the performance of the Services, Customer shall pay Minuteman the amount set forth in the Proposal (the "Price"), subject to any modifications in a Change Order (as defined below). Customer authorizes Minuteman to obtain labor and materials in accordance with the Price and the specifications set forth herein to accomplish the Services. Unless otherwise set forth in the Proposal, the Price does not include permits, licenses, sales tax, bonds, or shipping costs .

CHANGE ORDER: The parties may request changes in the Services consisting of reasonable additions, deletions or modifications pursuant to a written change order signed by both parties ("Change Order"). Such requested changes shall not be binding on Minuteman until accepted by Minuteman in a written Change Order. All reasonable and mutually agreed upon changes in the Services and corresponding changes in payments and deadlines shall be authorized by Customer in writing.

PAYMENT: Unless alternate payment terms are set forth in a Proposal, all amounts due hereunder are NET thirty (30) days of the date printed on the invoice. Minuteman may require a deposit in its sole discretion. To the extent permitted by applicable law, any unpaid amounts not received within seven (7) days from Minuteman' completion of the Services shall be subject to interest at the rate of 1.5% per month, or the maximum rate permitted by applicable law, whichever is less. Customer shall reimburse Minuteman for any interests, costs incidental to collection and attorney's fees incurred in the collection of past due amounts. Minuteman may suspend the Services in the event that Customer fails to timely pay any invoiced amount.

MOBILIZATION AND PROGRESS BILLING: Unless otherwise specified in the Proposal, Customer shall pay Minuteman in accordance with the following invoicing schedule: (i) an initial mobilization invoice equal to thirty percent (30%) of the Price shall be issued upon execution of the Proposal and shall be due prior to the commencement of Services. (ii) invoices for the balance of all equipment and materials shall be issued upon receipt of such items by Minuteman and shall be due in accordance with the terms set forth herein; and (iii) progress invoices for labor shall be issued monthly, based on the percentage of completion of the Services and as determined by Minuteman with reasonable discretion.

BILL AND HOLD: Customer may request that Minuteman invoice for and hold in its possession, certain equipment or materials purchased for the Project ("Bill and Hold Arrangement"). Minuteman may, in its sole discretion, agree to such request provided that all of the following conditions are satisfied: (i) Customer provides a written request confirming the need for a Bill and Hold Arrangement and acknowledging that billing will occur prior to delivery; (ii) the Bill and Hold Arrangement is established for a substantive business reason; (iii) the equipment and materials subject to the Bill and Hold Arrangement are specifically identified as belonging to Customer and are segregated from Minuteman's general inventory; (iv) the equipment and materials are complete, ready for physical transfer to Customer and available for delivery at Customer's request; and (v) Minuteman does not retain the ability to use or substitute the equipment and materials or direct them to another customer. Upon Minuteman's issuance of an invoice under a Bill and Hold Arrangement, Customer acknowledges and agrees that all risks of ownership, transfer to the Customer as of the invoice date.

PRE-LIEN NOTICE: MINUTEMAN HEREBY PROVIDES NOTIFICATION THAT ANY PERSON OR MINUTEMAN (INCLUDING MINUTEMAN) SUPPLYING LABOR OR MATERIAL FOR THIS IMPROVEMENT TO YOUR PROPERTY MAY FILE A LIEN AGAINST THE PROPERTY WHERE SERVICES ARE PERFORMED IF THAT PERSON OR MINUTEMAN IS NOT PAID FOR THE CONTRIBUTIONS. Upon a default in payment, a lien may be placed on the property and charges will be added from the date of substantial completion at the maximum rate allowed by law.

SCHEDULING: Customer acknowledges and agrees that any dates for performance of the Services set forth in a Proposal are estimates, and that Minuteman reserves the right to reschedule without additional charge to Customer, except as otherwise set forth herein. Customer will be responsible if any interruption of

Minuteman Security & Life Safety T&C's

Minuteman's Services results from Customer's failure to provide reasonable access or due to the acts of negligence of others not under Minuteman' direction.

TERMINATION: Minuteman may terminate this Agreement in the event of Customer's breach of any of its obligations, provided that Customer fails to cure such breach within thirty (30) days from Minuteman's written notice of the breach. In the event of Minuteman's termination for Customer's breach, Minuteman shall be entitled to collect from Customer all amounts for Services performed up to the date of termination, plus any amounts for non-returnable or non-refundable materials or contracts, and any demobilization costs. Minuteman may suspend its Services if there is any safety issue or if Customer fails to cooperate with Minuteman.

OPERATION: Customer shall be responsible for: (i) properly testing and setting the System on every closing and to properly turn off the System on each opening (if applicable); (ii) testing any detection device, or other electronic equipment designated in the Proposal prior to setting the System for closed periods; (iii) notifying Minuteman promptly if such equipment fails to respond to the test; and (iv) using and operating the System and the equipment properly and in accordance with proper operating procedures. Whenever Minuteman employees or authorized representatives are sent to the Customer's premises in response to a service call or alarm signal caused by the Customer improperly following operating instructions or failing to close or properly secure a protected point, Customer shall pay an additional service charge at Minuteman's prevailing rate per occurrence.

DELAYS; FORCE MAJEURE: Minuteman shall not be liable or responsible to Customer, not be deemed to have defaulted or breached this Agreement, for any failure or delay in fulfilling or performing any terms of this Agreement, however caused, or for interruptions of service caused by strikes, riots, floods, acts of God, fire, earthquake, explosion, government order, law, or action, , national emergency, revolution, insurrection, epidemic, pandemics, restraints or delays affecting carriers or inability or delay in obtaining supplies of adequate or suitable materials, materials, power outage, loss of communication and or other signal transmission lines, or by any event beyond the control of Minuteman.

EXCLUSIONS: Services to be provided by Minuteman pursuant to this Agreement do not include:

- Repair of damage or increase in completion time caused by failure to continually provide a suitable operating environment for the System as prescribed by Minuteman and/or the manufacturer of any equipment used in the System, including, but not limited to, the failure to provide, or the failure of, adequate and regulated electrical power, air conditioning or humidity control; or such special requirements as contained in the Proposal hereto.
- Repair of damage or increase in completion time caused by use of the equipment for other than the ordinary use for which the equipment was designed or purpose for which it was intended.
- Repair of damage, replacement parts (due to other than normal wear) or repetitive service calls caused by the use of unauthorized supplies or equipment.
- Repair of damage or increase in completion time caused by: neglect or misuse, alterations, which shall include, but not be limited to, any deviation from Minuteman's physical, mechanical or electrical machine design; attachments, which are defined as the mechanical, electrical or electronic interconnecting to non-Minuteman equipment and devices not supplied by Minuteman.

ADDITIONAL CHARGES: Unless otherwise specified in the Proposal, service charges for the System are based upon coverage during "normal business hours of operation." Services performed outside this window, or as a result of the failure of the Customer to adhere to the requirements as specified by either the manufacturer or outside the scope of the Agreement, shall be chargeable at Minuteman's prevailing rates. Customer shall not tamper with, adjust, alter, move, remove, or otherwise interfere with equipment without Minuteman's specific permission, nor permit the same by third party. Any work performed by Minuteman to correct Customer's breach of the foregoing obligation shall be paid for by Customer at Minuteman's prevailing rates. Remedial maintenance due to Acts of God or events beyond the control of Minuteman shall be corrected by Minuteman and paid for by Customer at Minuteman's prevailing rates.

Minuteman shall have the right to increase or decrease the rates provided above at any time or times after the expiration of one year from the date Services are provided under this Agreement, upon giving Customer written notice thirty (30) days in advance of the effective date of such increase or decrease.

MINUTEMAN'S LIMITS OF LIABILITY: Customer understands that Minuteman is not an insurer; that Customer is responsible for obtaining insurance for such reasons or purposes, including theft and vandalism, and in such amounts, as Customer shall determine. Customer further understands and agrees that the sums payable hereunder to Minuteman are based upon the value of Services offered and equipment value provided and such sums are not related to the value of property belonging to Customer or to others located on the Customer's premises. To the maximum extent permitted by law, Customer shall not seek indemnity under this Agreement from Minuteman, and specifically waives any rights for indemnity for any damages or losses caused by hazards to customers, invitees, guests, or property of Customer or third parties.

TO THE MAXIMUM EXTENT PERMITTED BY LAW, NEITHER MINUTEMAN NOR ITS AFFILIATES SHALL BE LIABLE FOR CONSEQUENTIAL, INDIRECT,

Minuteman Security & Life Safety T&C's

INCIDENTAL, SPECIAL, EXEMPLARY, PUNITIVE OR ENHANCED DAMAGES, LOST PROFITS OR REVENUES OR DIMINUTION IN VALUE, ARISING OUT OF OR RELATING TO THIS AGREEMENT OR THE UNDERLYING TRANSACTIONS HERETO, REGARDLESS OF (A) WHETHER SUCH DAMAGES WERE FORESEEABLE, (B) WHETHER OR NOT CUSTOMER WAS ADVISED OF THE POSSIBILITY OF SUCH DAMAGES AND (C) THE LEGAL OR EQUITABLE THEORY (CONTRACT, TORT, OR OTHERWISE) UPON WHICH THE CLAIM IS BASED, AND NOTWITHSTANDING THE FAILURE OF ANY AGREED OR OTHER REMEDY OF ITS ESSENTIAL PURPOSE. TO THE MAXIMUM EXTENT PERMITTED BY LAW, MINUTEMAN'S TOTAL LIABILITY ARISING OUT OF OR RELATED TO THIS AGREEMENT AND THE UNDERLYING TRANSACTIONS HERETO SHALL NOT EXCEED THE AMOUNT OF $250.00. CUSTOMER ACKNOWLEDGES AND AGREES THAT THIS LIMITATION OF LIABILITY IS AN ESSENTIAL PART OF THIS AGREEMENT AND FURTHER AGREES THAT THIS LIMITATION OF LIABILITY IS REASONABLE. The payment of this amount shall be Minuteman's sole and exclusive liability regardless of the amount of loss or damage incurred by the Customer.

INDEMNIFICATION: Customer shall indemnify and hold harmless Minuteman, its affiliates, and its and their their trustees, officers, professional staff, employees and agents from and against any loss, damage, claim or liability, including reasonable attorneys' fees (collectively "Liabilities") to the extent that such Liabilities arise from: (i) the negligence or willful misconduct of Customer; (ii) any personal injury, death, and damage to real or personal property arising from Customer; (iii) Customer's violation of applicable laws, rules, or regulations; and (iv) Customer's use of any product, equipment, or System. Customer's obligations as an indemnifying party shall include those claims arising from Customer, its affiliates, and its and their trustees, officers, professional staff, employees or agents.

WARRANTY: The Services provided under this Agreement are subject to a one (1) year warranty as follows:

- What is Covered: This warranty covers any defects in workmanship, including installation, with the exceptions stated below.
- How Long Coverage Lasts: This warranty runs for one year from the date the System was installed.
- What Is Not Covered: This warranty does not cover intentional or misuse or of any of the system components or software. The warranty does not cover damage as a result of acts of god (weather, lighting, floods, storms, etc...) or electric surge.
- What Minuteman Will Do: As Customer's sole and exclusive remedy and Minuteman's sole responsibility and liability, Minuteman will repair any part of the System that is proved to be defective in workmanship. In the event repair is not possible on certain System components, Minuteman will replace said component with similar specification and price.
- How To Get Service: Contact our service department at your nearest service center. A service representative will review your system and take any necessary action to correct problems covered by this warranty.
- How State Law Applies: This warranty gives you specific legal rights, and you may also have other rights which vary from state to state.

Customer acknowledges that the Services and/or System may contain or incorporate products or materials manufactured by a third party ("Third-Party Materials"). Third-Party Materials provided under this Agreement and are not covered by warranties set forth herein; provided, however, Minuteman shall pass through to Customer any warranties given by such third parties for any Third-Party Materials, to the extent permitted by such warranties. If any warranties made or given by such third parties are not assignable, Minuteman shall use commercially reasonable efforts to enable Customer to receive the benefit from such warranties. EXCEPT FOR THE EXPRESS REPRESENTATIONS AND WARRANTIES SET FORTH HEREIN: (I) NEITHER MINUTEMAN NOR ANY PERSON ON MINUTEMAN'S BEHALF HAS MADE OR MAKES ANY EXPRESS OR IMPLIED REPRESENTATION OR WARRANTY WHATSOEVER, EITHER ORAL OR WRITTEN, RELATED TO THE SYSTEMS OR SERVICES, INCLUDING, WITHOUT LIMITATION, ANY WARRANTIES OF DESIGN, MERCHANTABILITY, FITNESS FOR A PARTICULAR PURPOSE, TITLE, OR NON-INFRINGEMENT, THAT THE SYSTEM OR THE SERVICES IT FURNISHES WILL AVERT OR PREVENT SECURITY BREACHES, OR THE CONSEQUENCES THEREFROM, WHETHER ARISING BY LAW, COURSE OF DEALING, COURSE OF PERFORMANCE, USAGE OF TRADE OR OTHERWISE, ALL OF WHICH ARE EXPRESSLY DISCLAIMED; AND (II) CUSTOMER ACKNOWLEDGES THAT IT HAS NOT RELIED UPON ANY REPRESENTATION OR WARRANTY MADE BY MINUTEMAN, OR ANY OTHER PERSON ON MINUTEMAN'S BEHALF, EXCEPT AS SPECIFICALLY PROVIDED HEREIN.

SUBCONTRACTING: Minuteman may subcontract any of its obligations under this Agreement; provided, however, that Minuteman shall not be relieved of any of its obligations under this Agreement by the appointment of such subcontractor.

ASSIGNMENT: Customer may not directly or indirectly assign, transfer, or delegate any of or all of its rights or obligations under this Agreement, voluntarily or involuntarily, including by change of control, merger (whether or not such party is the surviving entity), operation of law, or any other manner, without the prior written consent of Minuteman. Minuteman may freely assign or transfer any of its rights, obligations, or interests of this Agreement without prior written consent of

Minuteman Security & Life Safety T&C's

Customer. Any purported assignment or delegation in violation of this Section shall be null and void.

TARIFF & DUTY ADJUSTMENT CLAUSE: Prices are based on current tariffs and duties. Any increases due to changes in tariffs, duties, or government fees shall be Customer's responsibility. Minuteman reserves the right to adjust pricing and will provide notice before order fulfillment.

THIS QUOTE INCLUDES: Only the items and quantities of devices listed on this quotation. The design is pending approval of authorities having jurisdiction where approval is required. Pre-installation rough-in followed by one site visit for final connection of head-end w/ training if needed and all required testing to be performed during the same visit. Acceptance and testing documentation (when applicable). For alarm systems with a key lock box, if shown on plans the least expensive lock box will be provided unless specified otherwise. Services will be performed during 'normal business hours'. Minuteman may request a network connection in the building to facilitate commissioning and service remotely.

THIS PROPOSAL DOES NOT INCLUDE: Multiple site visits for phased projects unless it was specifically advised of the phasing schedule prior to providing this Proposal. Third party approvals or third-party testing or inspections unless specifically listed. Return visits if other trades could not be coordinated to be present during Minuteman's original site visit. Labeling of devices, controls or any required signs unless specifically listed on the Proposal. Unforeseen existing conditions that were not brought to our attention prior to the Proposal.

IT IS THE CUSTOMER'S RESPONSIBILITY TO: Provide a revised equipment count if the quantities shown are incorrect. Provide a minimum of FIVE business days to schedule. Provide a clean and safe working environment that complies with all OSHA rules and standards. Provide a safe and secure, climate-controlled storage area for tools and the equipment being installed. Provide labeling and any required signs. Provide trash receptacles and pay for all trash removal unless trash removal is specifically listed. Cutting, patching, and painting of any areas affected by the installation unless each of these functions are specifically listed on the quote. If there is a custom annunciator/map or custom control panel, etc. then AutoCAD files must be provided to work from. To pay additional travel and labor costs for any additional unplanned site-visits.

TC-Escalation Clause: Due to recent market volatility and ongoing supply chain issues, Minuteman is incorporating the following clause into all proposals and maintenance contracts: Through no fault of Minuteman, In the event of a delay in product availability or price increase of materials procured by any manufacturer, supplier, reseller, or distributer, the Price, time of completion, or contract requirements shall be adjusted by a Change Order. A change in price of any item of material from our manufacturers, suppliers, resellers, or distributers will be considered between the date of this Agreement and the date of installation. Issuance of a purchase order or signed proposal constitutes acceptance of this clause.

1025 Thomas Drive
Warminster, PA 18974
https://www.minutemanst.com

Standard Maintenance Agreement T&C's

Standard Maintenance Agreement

Levels of Service

Features	Silver	Gold	Platinum
Renewal of Manufacturer Software	Covered	Covered	Covered
Remote Support	Covered	Covered	Covered
Annual Software Maintenance	–	Covered	Covered
Corrective Services (Business Hours)	T&M	Covered	Covered
Emergency Corrective Services (After Hours)	T&M	T&M	Covered
Guaranteed Incident Response Times	–	Covered	Covered
Comprehensive Parts Coverage	–	–	Covered
Annual Preventative Maintenance	–	–	Covered

Silver Tier

Software & License Renewal: Any licenses and software support agreements required by the manufacturer will be managed and renewed throughout the system's lifecycle. This ensures uninterrupted system functionality, assistance from manufacturer support resources, and access to the latest software updates. Any additional licenses required due to system augmentations may be subject to additional fees.

Remote Support: Remote diagnosis and technical assistance will be provided for covered systems using secure access methods approved by Customer's IT department. Remote support includes configuration adjustment, software troubleshooting, and performance verification. Customer is responsible for providing network connectivity, and if proper access cannot be provided through a secure VPN, Minuteman will not be able to offer remote support. If an issue cannot be resolved remotely or if such remote access is unavailable, Minuteman will dispatch qualified personnel to perform on-site corrective action on a mutually agreed schedule.

Emergency System Maintenance and Repairs: Minuteman will provide customer access to on-call technicians outside of normal business hours via our After-Hours Support Number +1 (978) 783-0018. This line is monitored 24 hours a day, 365 days per year and is only intended for critical system failures. Should Minuteman need to deploy resources to the customer site, Silver customers may be subject to additional charges at standard labor rates. Non-emergency service requests should be directed to our website for better routing and customer service.

Gold Tier

Our Gold program includes all features provided through the Silver program, plus the following additional services:

Annual Software Maintenance: Software maintenance will be conducted on an annual basis, including an update to the newest recommended software version, software patching, and firmware updates. Software maintenance will be conducted remotely unless otherwise specified or if secure access cannot be provided. If secure access is unavailable, Minuteman can provide on-site software support, which may be subject to additional charges.

Corrective Services: On-site diagnostic and repair services will be provided to address system issues that cannot be resolved through Remote Support. Corrective Services are intended to restore normal operation of covered systems and may include troubleshooting or software adjustments as required. Information on guaranteed response times can be found below.

Standard Maintenance Agreement T&C's

Incident Response Times: Minuteman will respond to service incidents in accordance with the classification of the request and Customer's selected service tier.

General System Support (Non-Critical): Applies to issues that do not materially affect system functionality or life-safety operations. Services are to be provided during normal business hours.

Gold

Remote: 1 Business Day
On-Site: 3 Business Days

Critical System Support: Applies to issues resulting in significant impairment or total loss of system functionality that impacts safety, security, or compliance.

Gold

Remote: 4 Hours
On-Site: 24-Hours

Platinum Tier

Our Platinum program includes all features provided through the Gold program, plus the following additional services:

Comprehensive Parts Coverage: Comprehensive Parts Coverage is provided for hardware issues that cannot be resolved through troubleshooting or repair. In the event of equipment failure, Minuteman will replace the affected component with the same or equivalent model at no additional cost to the customer. This coverage only applies to equipment installed by Minuteman.

Incident Response Times: Minuteman offers increased response times in our platinum program.

General System Support (Non-Critical) : Applies to issues that do not materially affect system functionality or life-safety operations. Services are to be provided during normal business hours.

Platinum

Remote: 1 Business Day
On-Site: 2 Business Days

Critical System Support : Applies to issues resulting in significant impairment or total loss of system functionality that impacts safety, security, or compliance.

Platinum

Remote: 2 Hours
On-Site: 8 Hours

Annual Preventative Maintenance: Minuteman will provide one (1) Preventative Maintenance visit per year which will include the following services:

- Cleaning and visual inspection of cameras for wear or damage; refocusing and re-aiming as required.
- Testing of video servers for proper recording, playback, and live video functionality.
- Testing of access control doors for correct operation.
- Replacement of batteries exceeding two (2) years of age.
- Testing and visual inspection of intercoms.

Preventative Maintenance only applies to equipment installed by Minuteman and specifically covered under this Agreement. Additional devices will not be included unless otherwise stated. All inspections will be conducted during normal business hours.

Standard Maintenance Agreement T&C's

Following each visit, Minuteman will provide a report outlining any repairs performed and recommended upgrades. Additional requested preventative maintenance visits will be billed on a time-and-material basis.

This Proposal is subject to the Maintenance Agreement Terms & Conditions, attached hereto. Any additional or different terms or conditions proposed by Customer are objected to and are hereby rejected unless specifically approved by Minuteman in writing. By signing Customer acknowledges and agrees that it has read this Proposal and the Maintenance Agreement Terms & Conditions and agrees to be bound by all terms and conditions set forth herein.

Maintenance Agreement Terms & Conditions

These Maintenance Agreement Terms & Conditions (these "Terms & Conditions"), including the terms and conditions below, and any agreement, estimate, proposal, work order, or quote executed in writing pursuant thereto (each a "Proposal" and together with the Terms & Conditions, this "Agreement"), are entered into by and between Minuteman Security Technologies, Inc. ("Minuteman") and the customer listed above ("Customer") and are subject to the laws in effect in the State in which it has been signed and executed.

SERVICES: This Agreement constitutes an offer to Customer for performance of the services listed above (the "Services") upon the terms and conditions stated herein, and constitutes a binding contract between Customer and Minuteman upon Customer's acceptance of a Proposal. Upon acceptance, this Agreement, together with all documents referenced herein, shall constate the complete and exclusive agreement between the parties, superseding all other prior oral and written agreements. No modifications, alterations, additions or change orders shall be binding or enforceable unless approved in writing by both parties. For the avoidance of doubt, any terms and conditions listed in Customer's purchase order, confirmation, communications, or otherwise shall not apply to this Agreement and are hereby rejected by Minuteman.

Price: In consideration of the Services identified above, Customer agrees to pay the total quarterly charge set forth in the Proposal in accordance with the payment terms specified on the invoice. The cost of services does not include permits, licenses, sales tax, shipping costs, or costs for materials and equipment, unless identified in the Proposal.

Payment: Unless alternate payment terms are set forth in a Proposal, all amounts due hereunder are in accordance with the payment terms on the specified invoice. Any unpaid amounts not received within seven (7) days from the due date shall be subject to interest at the rate of 1.5% per month, or the maximum rate permitted by applicable law, whichever is less. Customer shall reimburse Minuteman for any interest, costs, costs incidental to collection and attorney's fees incurred in the collection of past-due amounts. Minuteman reserves the right to suspend this Agreement in the event that the customer fails to pay the owed amount on or before the payment due date.

Renewal: Upon expiration of the Initial Term, this Agreement will automatically renew for consecutive one (1) year terms (each, a "Renewal Term" and collectively with the Initial Term, the "Term") unless either party provides written notice of termination at least sixty (60) days prior to the expiration date of the then current Term. Multi-year agreements may be subject to an annual price increase equal to 5% or the current CPI rate, whichever is lower. Annual price may also be modified if additional hardware is added to the system within 6 months of an annual term beginning. The updated Proposal will be provided to the Customer at least 60 days prior to expiration of the then current Term. Unless the Customer provides written notice rejecting the updated Proposal prior to the renewal date, the updated Proposal will automatically take effect for the next Renewal Term.

Termination: Minuteman may terminate this Agreement in the event of Customer's breach of any of its obligations, if Customer fails to cure such breach within thirty (30) days from Minuteman's written notice of the breach. In the event of Minuteman's termination for Customer's breach, Minuteman shall be entitled to collect from Customer all amounts for Services performed up to the date of termination, plus any amounts for non-returnable or non -refundable materials or contracts, and any demobilization costs. Minuteman may suspend Services if there is any safety issue or if Customer fails to cooperate with Minuteman. In the event of termination of this Agreement for any reason, the Customer shall remain responsible for, and promptly pay to Minuteman, all fees and expenses incurred by Minuteman up to the effective termination date, plus any amounts for non-returnable or non -refundable materials or contracts, and any demobilization costs.

Warranty: Minuteman represents and warrants the Services will materially conform to the requirements of this Agreement at the time of completion. Customer must notify Minuteman of any nonconformance at the time Services are completed, or else Customer is deemed to have accepted the Services. If Customer provides timely notification of nonconforming Services, Minuteman shall, as Customer's sole and exclusive remedy and Minuteman's sole liability and responsibility for non-conforming Services, reperform such Services so that they are conforming Services. EXCEPT FOR THE EXPRESS REPRESENTATIONS AND WARRANTIES SET FORTH HEREIN: (I) NEITHER MINUTEMAN NOR ANY PERSON ON MINUTEMAN'S BEHALF HAS MADE OR MAKES ANY EXPRESS OR

Standard Maintenance Agreement T&C's

IMPLIED REPRESENTATION OR WARRANTY WHATSOEVER, EITHER ORAL OR WRITTEN, RELATED TO THE SERVICES, INCLUDING, WITHOUT LIMITATION, ANY WARRANTIES OF DESIGN, MERCHANTABILITY, FITNESS FOR A PARTICULAR PURPOSE, TITLE, OR NON-INFRINGEMENT, THAT THE SERVICES IT FURNISHES WILL AVERT OR PREVENT SECURITY BREACHES, OR THE CONSEQUENCES THEREFROM, WHETHER ARISING BY LAW, COURSE OF DEALING, COURSE OF PERFORMANCE, USAGE OF TRADE OR OTHERWISE, ALL OF WHICH ARE EXPRESSLY DISCLAIMED; AND (II) CUSTOMER ACKNOWLEDGES THAT IT HAS NOT RELIED UPON ANY REPRESENTATION OR WARRANTY MADE BY MINUTEMAN, OR ANY OTHER PERSON ON MINUTEMAN'S BEHALF, EXCEPT AS SPECIFICALLY PROVIDED HEREIN.

Exclusions: Services to be provided by Minuteman pursuant to this Agreement do not include:

- Repair of damage or increase in completion time caused by failure to continually provide a suitable operating environment for the system as prescribed by Minuteman and/or the manufacturer of any equipment used in the system, including, but not limited to, the failure to provide, or the failure of, adequate and regulated electrical power, air conditioning or humidity control; or such special requirements as contained in the Proposal hereto.
- Repair of damage or increase in completion time caused by use of equipment for other than the ordinary use for which the equipment was designed or purpose for which it was intended.
- Repair of damage, replacement parts (due to other than normal wear) or repetitive service calls caused by the use of unauthorized supplies or equipment.
- Repair of damage or increase in completion time caused by: neglect or misuse, alterations, which shall include, but not be limited to, any deviation from Minuteman's physical, mechanical or electrical machine design; attachments, which are defined as the mechanical, electrical or electronic interconnecting to non-Minuteman equipment and devices not supplied by Minuteman.
- Emergency calls for non-critical issues.
- If persons other than Minuteman representatives perform maintenance or repairs that result in further work for Minuteman, such repairs will be billed on a time and materials basis. This Agreement does not include maintenance or service of customer supplied PCs and Networks. The Customer's IT department may be required to help facilitate maintenance and service of the listed systems.

DELAYS; FORCE MAJEURE: Minuteman shall not be liable or responsible to Customer, nor be deemed to have defaulted or breached this Agreement, for any failure or delay in fulfilling or performing any terms of this Agreement, however caused, or for interruptions of service caused by strikes, riots, floods, acts of God, fire, earthquake, explosion, government order, law, national emergency, revolution, insurrection, epidemic, pandemics, restraints or delays affecting carriers or inability or delay in obtaining supplies of adequate or suitable materials, materials, power outage, loss of communication and or other signal transmission lines, or by any event beyond the control of Minuteman.

MINUTEMAN'S LIMITS OF LIABILITY: TO THE MAXIMUM EXTENT PERMITTED BY LAW, NEITHER MINUTEMAN NOR ITS AFFILIATES SHALL BE LIABLE FOR CONSEQUENTIAL, INDIRECT, INCIDENTAL, SPECIAL, EXEMPLARY, PUNITIVE OR ENHANCED DAMAGES, LOST PROFITS OR REVENUES OR DIMINUTION IN VALUE, ARISING OUT OF OR RELATING TO THIS AGREEMENT OR THE UNDERLYING TRANSACTIONS HERETO, REGARDLESS OF (A) WHETHER SUCH DAMAGES WERE FORESEEABLE, (B) WHETHER OR NOT CUSTOMER WAS ADVISED OF THE POSSIBILITY OF SUCH DAMAGES AND (C) THE LEGAL OR EQUITABLE THEORY (CONTRACT, TORT, OR OTHERWISE) UPON WHICH THE CLAIM IS BASED, AND NOTWITHSTANDING THE FAILURE OF ANY AGREED OR OTHER REMEDY OF ITS ESSENTIAL PURPOSE. TO THE MAXIMUM EXTENT PERMITTED BY LAW, MINUTEMAN'S TOTAL LIABILITY ARISING OUT OF OR RELATED TO THIS AGREEMENT AND THE UNDERLYING TRANSACTIONS HERETO SHALL NOT EXCEED THE AMOUNT OF $250.00. CUSTOMER ACKNOWLEDGES AND AGREES THAT THIS LIMITATION OF LIABILITY IS AN ESSENTIAL PART OF THIS AGREEMENT AND FURTHER AGREES THAT THIS LIMITATION OF LIABILITY IS REASONABLE. The payment of this amount shall be Minuteman's sole and exclusive liability regardless of the amount of loss or damage incurred by the Customer.

INDEMNIFICATION: Customer shall indemnify and hold harmless Minuteman, its affiliates, and its and their trustees, officers, professional staff, employees and agents from and against any loss, damage, claim or liability, including reasonable attorneys' fees (collectively "Liabilities ") to the extent that such Liabilities arise from: (i) the negligence or willful misconduct of Customer; (ii) any personal injury, death, and damage to real or personal property arising from Customer; (iii) Customer's violation of applicable laws, rules, or regulations; and (iv) Customer's use of any product, equipment, or system. Customer's obligations as an indemnifying party shall include those claims arising from Customer, its affiliates, and its and their trustees, officers, professional staff, employees or agents.

SUBCONTRACTING: Minuteman may subcontract any of its obligations under this Agreement; provided, however, that Minuteman shall not be relieved of any of its obligations under this Agreement by the appointment of such subcontractor.

ASSIGNMENT: Customer may not directly or indirectly assign, transfer, or delegate any of or all of its rights or obligations under this Agreement, voluntarily or involuntarily, including by change of control, merger (whether or not such party is the surviving entity), operation of law, or any other manner, without the prior written consent of Minuteman. Minuteman may freely assign or transfer any of its rights, obligations, or interests of this Agreement without prior written consent of Customer. Any purported assignment or delegation in violation of this Section shall be null and void.

IT IS THE CUSTOMER'S RESPONSIBILITY TO: (i) provide a clean and safe working environment that complies with all OSHA rules and standards; (ii) provide

Standard Maintenance Agreement T&C's

labeling and any required signs; (iii) provide trash receptacles and pay for all trash removal unless trash removal is specifically listed; (iv) cut, patch, and paint any areas affected by the Services; and (v) provide AutoCAD files if there is a custom annunciator/map or custom control panel, etc.

BENSALEM SCHOOL DISTRICT
ANNUAL FIRE INSPECTION

Fire Alarm, Sprinkler and Hydrant Inspection Estimate

PROTECTED BY
MERCURY SYSTEMS
BURGLAR/FIRE ALARM SERVICES

PROTECTED BY MERCURY SYSTEMS
BURGLAR/FIRE ALARM SERVICES

Thomas A. Walsh
Operations Manager
Mercury Systems, LLC
CoStar # 040-E25-312

Bensalem Township School District
3000 Donallen Dr.
Bensalem, Pa 19020
Attn: Mr. Kevin Curry

August 1, 2026

Mr. Curry,

Pursuant to the Request to Bid the Annual Fire Alarm, Sprinkler, and Hydrant Inspection at all applicable School District Buildings, Mercury Systems, LLC. Proposes to perform the following services: Annual NFPA Fire and Sprinkler System Inspections

Buildings 3-Year Schedule Fee is as follows:

Bensalem School District Fire and Sprinkler Inspection Fees:

School:		**2026**	**2027**	**2028**
Administration Building	Fire	$1,514	$1,514	$1,514
	Sprinkler	$485	$485	$485
Belmont Elementary	Fire	$2,998	$2,998	$2,998
	Hydrants	$366	$366	$366
Benjamin Rush Elementary	Fire Alarm	$2,051	$2051	$2,051
	Hydrants	$366	$366	$366
Snyder Middle School	Fire Alarm	$2,712	$2712	$2,712
	Sprinkler	$1,228	$1,228	$1,228
Cornwells Elementary	Fire Alarm	$2,998	$2,998	$2,998
	Sprinkler and Hydrant	$1,110	$1,110	$1,110
High School	Fire Alarm	$8,424	$8,424	$8,424
	Sprinkler and Hydrant	$5,382	$5,382	$5,382
Struble Elementary School	Fire Alarm	$2,712	$2,712	$2,712
	Hydrants	$363	$363	$363

School:		**2026**	**2027**	**2028**
Shafer Middle School	Fire Alarm	$2,051	$2,051	$2,051
Faust Elementary	Fire Alarm	$2,051	$2,051	$2,051
Valley Elementary	Fire Alarm	$2,006	$2,006	$2,006
	Sprinkler and Hydrant	$1,622	$1,622	$1,622
Vehicle Maintenance Bldg.	Fire Alarm	$1,323	$1,323	$1,323
	Sprinkler	$463	$463	$463
Facilities Building	Fire Alarm	$1,323	$1,323	$1,323
Total Cost Yearly		**$43,548**	**$43,548**	**$43,548**

I trust this proposal will satisfy your requirements. Should you have any questions, please do not hesitate to contact me.

Thank you for your courtesy and consideration.

Sincerely,

Thomas A. Walsh
Operations Manager
Mercury Systems, LLC

DWD Mechanical Contractors
1005 Kedron Ave, Morton, PA 19070
(610) 328-0820
Costar # 008-E22-897

Attn: Lynn Breznitsky Phone: Email: lbreznitsky@bensalemsd.org Company: Bensalem School District Address: 3000 Donallen Dr, Bensalem, PA 19020	Date: Aug 3, 2026 Re: Bensalem HS - leaking sanitary pipe repair Estimate #: 26-SSQ-1299 Property: Bensalem High School Address: 4319 Hulmeville Road, Bensalem, pa 19020

As requested, we are pleased to offer our proposal for the above referenced project as follows:

SCOPE OF WORK

Scope of work: Plumbing leak repair Bensalem HS
Furnish labor and materials to saw cut and excavate the sanitary line.
Furnish labor and materials to remove existing compromised piping and replace with new piping.
Furnish labor to back fill and patch concrete, no further restoration included i.e. flooring.
Clean off job and remove protection.
Pricing includes all materials including saw cutting and concrete.
Work to commence prior to school returning.

SPECIFIC INCLUSIONS

Pricing Breakdown

Material Total	$10,610.00
Labor Total	$9,520.00

QUALIFICATIONS

1. Our offer is firm for 30 thirty days from the date listed above.
2. Our offer is predicated upon a clear and accessible area that will be made available by others, where our work is to be performed.
3. Unless noted in the specific inclusions, our work will be performed during our normal working hours and workweek.
4. No permit fees included unless stated otherwise.
5. All quotes subject to market fluctuations.
6. Plus any applicable taxes, if tax exempt, please forward tax exempt certificate.

SPECIFIC EXCLUSIONS

This proposal is based on the following documentation and as indicated in the scope of work above.

Total Proposal as Outlined Above..... $20,130.00

Our goal is to provide quality construction and competitive pricing. We will accomplish this by performing efficiently, timely, safely and to your complete and total satisfaction. Thank you for allowing us to proceed by authorizing the work in the space provided below.

Choir Room Storm Water Pipe Repairs Proposals

DWD Mechanical Contractors -	$20,130.00
McMclure Company -	$21,956.00
Devine Brothers Inc -	No Bid

BENSALEM TOWNSHIP SCHOOL DISTRICT
BENSALEM, PA 19020

INDEMNITIES HOLD HARMLESS AGREEMENT:

Cecelia Snyder PTO agrees to indemnify and hold harmless the Bensalem
(Organization)
Township School District, their agents or employees from and against all loss or expense (including costs and attorneys' fees) by reason of liability imposed by law upon the School District for damages because of bodily injury, including death, at any time, resulting therefrom sustained by any person or persons or on account of damage to property including loss of use thereof, arising out of or in consequence of the use of Bensalem Township School District's facilities whether such injuries to persons or damage to property is due or claimed to be due to the negligence in whole or in part of the organization, their subcontractors, the Bensalem Township School District, their agents and employees, except only such injury or damage that shall have been occasioned by the sole negligence of the Bensalem Township School District, their agents and employees.

(Authorized Signature)

Nedra McCormac
(Printed Signature – Title)

07/04/2026
(Date)

BENSALEM TOWNSHIP SCHOOL DISTRICT
BENSALEM, PA 19020

FACILITIES RENTAL FORM

NAME OF REQUESTING ORGANIZATION: Snyder PTO

8/5/26
DATE

ORGANIZATION ADDRESS: 3330 Hulmeville Rd

Bensalem PA 19020

PHONE (BUSINESS)

CONTACT PERSON: Nedra McCormac

CONTACT PERSON ADDRESS:

CONTACT E-MAIL: snyderhs@bensalemsd.org

215-917-8547
PHONE (CELL)

FACILITIES REQUESTED

- [ ] BENSALEM HS
- [ ] SHAFER MS
- [x] SNYDER MS
- [ ] BELMONT ES
- [ ] CORNWELLS ES
- [ ] FAUST ES
- [ ] RUSH ES
- [ ] STRUBLE ES
- [ ] VALLEY ES
- [ ] ADMINISTRATIVE CENTER

PURPOSE: Car wash

DATE(S) REQUESTED: Sat 9/12 TO:
Raindate 9/19

TIME(S) REQUESTED: 7:30am TO: 12:30pm

DATE(S) AVAILABLE: TO: CODE#

NUMBER OF ANTICIPATED PARTICIPANTS: ADULTS: 4 STUDENTS: 10-15

ROOMS REQUESTED

- [ ] GYMNASIUM
- [ ] CAFE/MULTI-PURPOSE RM
- [ ] KITCHEN
- [ ] INTERNET CAFE
- [ ] LIBRARY
- [ ] CLASSROOM
- [ ] AUDION
- [ ] ATHLETIC FIELD
- [ ] AUDITORIUM
- [ ] NATATORIUM/POOL
- [ ] STADIUM

LOCATION: parking lot, spigot for hose

ADDITIONAL NEEDS (EQUIPMENT, # OF CHAIRS, # OF TABLES, QTY, ETC.)

A/V NEEDS (MICROPHONES, PROJECTORS, SOUND SYSTEM, ETC :)

Additionally, the user has been provided with and has read the Rules and Regulations for use of School Facilities and the policies of the Board of School Directors of the Bensalem Township School District concerning the use of its buildings and agrees to follow them in letter and spirit.

Authorized Signature: Nedra McCormac Date: 8/5/24

Principal's Signature: Nicole Bourque Date: 8/5/26

BENSALEM TOWNSHIP SCHOOL DISTRICT
RENTAL OFFICE
4319A HULMEVILLE ROAD
BENSALEM, PA 19020
215-750-2800 X 4301
DSHULSKI@BENSALEMSD.ORG

EVENT:
Snyder PTO (Veteran's Breakfast Fundraiser Carwash Event @ Snyder Middle School) CLASS II
September 12, 2026 or September 19, 2026(rain-date)
Run by Teachers & PTO
COST ABSORBED BY THE SCHOOL DISTRICT SUBMITTED FOR BOARD CONSIDERATION / APPROVAL

	QUANTITY	TIME	RATE	TOTAL
AREAS RENTED				
Parking Lot @ Snyder	n/a	n/a	n/a	N/A
CUSTODIAL HOURS				
(1) 7:30am - 12:30pm (Open School / Bathrooms)	1.00	5.00	$58.76	$293.80

HOLD HARMLESS & COI ATTACHED (APPLICATION FEE / SECURITY DEPOSIT N/A)-CLASS II

RVNA®
A DOXA INSURANCE COMPANY

Specialty Insurance Products

Cecelia Snyder Middle School PTO
3330 Hulmeville Rd
Bensalem , PA 19020

Insurance Policy Number: NANPO0073152

Tel. (800) 364-2433
Email support@rvnuccio.com
Online rvnuccio.com

Office 10148 Riverside Drive
Toluca Lake, CA 91602

Your **Insurance** Policy

What's included:

- ✓ Your Certificate(s) of Insurance
- ✓ A copy of your Application
- ✓ Your Memorandum
- ✓ Your Coverages
- ✓ Your Quote Letter

Thank you for choosing R.V. Nuccio & Associates Insurance Brokers — We look forward to helping with your specialty insurance needs.



CERTIFICATE OF LIABILITY INSURANCE

DATE (MM/DD/YYYY): 7/14/2026

THIS CERTIFICATE IS ISSUED AS A MATTER OF INFORMATION ONLY AND CONFERS NO RIGHTS UPON THE CERTIFICATE HOLDER. THIS CERTIFICATE DOES NOT AFFIRMATIVELY OR NEGATIVELY AMEND, EXTEND OR ALTER THE COVERAGE AFFORDED BY THE POLICIES BELOW. THIS CERTIFICATE OF INSURANCE DOES NOT CONSTITUTE A CONTRACT BETWEEN THE ISSUING INSURER(S), AUTHORIZED REPRESENTATIVE OR PRODUCER, AND THE CERTIFICATE HOLDER.

IMPORTANT: If the certificate holder is an ADDITIONAL INSURED, the policy(ies) must be endorsed. If SUBROGATION IS WAIVED, subject to the terms and conditions of the policy, certain policies may require an endorsement. A statement on this certificate does not confer rights to the certificate holder in lieu of such endorsement(s).

PRODUCER DOXA Programs, LLC DBA R.V. Nuccio & Associates Insurance Brokers 10148 Riverside Drive Toluca Lake, CA 91602	**CONTACT NAME:** Joseph Guerrero **PHONE (A/C, No, Ext):** (800) 364-2433 **FAX (A/C, No):** (818) 980-1595 **E-MAIL ADDRESS:** support@rvnuccio.com
INSURED Cecelia Snyder Middle School PTO 3330 Hulmeville Rd Bensalem , PA 19020	**INSURER(S) AFFORDING COVERAGE** — **NAIC #** **INSURER A :** Fireman's Fund Insurance Company — 21873 **INSURER B :** Axis Insurance Company — 37273 **INSURER C :** **INSURER D :** **INSURER E :** **INSURER F :**

COVERAGES **CERTIFICATE NUMBER:** **REVISION NUMBER:**

THIS IS TO CERTIFY THAT THE POLICIES OF INSURANCE LISTED BELOW HAVE BEEN ISSUED TO THE INSURED NAMED ABOVE FOR THE POLICY PERIOD INDICATED. NOTWITHSTANDING ANY REQUIREMENT, TERM OR CONDITION OF ANY CONTRACT OR OTHER DOCUMENT WITH RESPECT TO WHICH THIS CERTIFICATE MAY BE ISSUED OR MAY PERTAIN, THE INSURANCE AFFORDED BY THE POLICIES DESCRIBED HEREIN IS SUBJECT TO ALL THE TERMS, EXCLUSIONS AND CONDITIONS OF SUCH POLICIES. LIMITS SHOWN MAY HAVE BEEN REDUCED BY PAID CLAIMS.

INSR LTR	TYPE OF INSURANCE	ADDL INSR	SUBR WVD	POLICY NUMBER	POLICY EFF (MM/DD/YYYY)	POLICY EXP (MM/DD/YYYY)	LIMITS	
A	**GENERAL LIABILITY** ✔ COMMERCIAL GENERAL LIABILITY ☐ CLAIMS-MADE ✔ OCCUR GEN'L AGGREGATE LIMIT APPLIES PER: ✔ POLICY ☐ PRO-JECT ☐ LOC	✔		UST021067250 NANPO0073152	1/7/2026	1/7/2027	EACH OCCURRENCE DAMAGE TO RENTED PREMISES MEDICAL EXPENSE PERSONAL & ADV INJURY GENERAL AGGREGATE PRODUCTS - COMP/OP AGG	$ 1,000,000 $ 100,000 $ 5,000 $ 1,000,000 $ 2,000,000 $ 2,000,000
	AUTOMOBILE LIABILITY ☐ ANY AUTO ☐ ALL OWNED AUTOS ☐ SCHEDULED AUTOS ☐ HIRED AUTOS ☐ NON-OWNED AUTOS						COMBINED SINGLE LIMIT BODILY INJURY (Per person) BODILY INJURY (Per accident) PROPERTY DAMAGE (Per accident)	$ $ $ $
	☐ **UMBRELLA LIAB** ☐ OCCUR ☐ **EXCESS LIAB** ☐ CLAIMS-MADE ☐ DED ☐ RETENTION $						EACH OCCURRENCE AGGREGATE	$ $
	WORKERS COMPENSATION AND EMPLOYERS' LIABILITY ANY PROPRIETOR/PARTNER/EXECUTIVE OFFICER/MEMBER EXCLUDED? Y / N ☐ **(Mandatory in NH)** If yes, describe under DESCRIPTION OF OPERATIONS below	N / A					WC STATU-TORY LIMITS ☐ OTH-ER E.L. EACH ACCIDENT E.L. DISEASE - EA EMPLOYEE E.L. DISEASE - POLICY LIMIT	$ $ $
A	Directors and Officers			NPODO0082119	1/7/2026	1/7/2027		$1,000,000
B	AD&D Medical Plus			NPOAM0053525	1/7/2026	1/7/2027		$10,000
A	Sexual Misconduct Liability			NANPO0073152	1/7/2026	1/7/2027		$1,000,000/$1,000,000

DESCRIPTION OF OPERATIONS / LOCATIONS / VEHICLES (Attach ACORD 101, Additional Remarks Schedule, if more space is required)

Additional Insured: / Sexual Misconduct Liability included. Event Description: Car wash Start Date: 09/12/2026 End Date: 09/12/2026

CERTIFICATE HOLDER

Bensalem Township School Distict

3000 Donallen Drive

Bensalem , PA 19020

CANCELLATION

SHOULD ANY OF THE ABOVE DESCRIBED POLICIES BE CANCELLED BEFORE THE EXPIRATION DATE THEREOF, NOTICE WILL BE DELIVERED IN ACCORDANCE WITH THE POLICY PROVISIONS.

AUTHORIZED REPRESENTATIVE

Joseph Guerrero

© 1988-2010 ACORD CORPORATION. All rights reserved.

THIS ENDORSEMENT CHANGES THE POLICY. PLEASE READ IT CAREFULLY.

ADDITIONAL INSURED – DESIGNATED PERSON OR ORGANIZATION

This endorsement modifies insurance provided under the following:

COMMERCIAL GENERAL LIABILITY COVERAGE PART

SCHEDULE

Name Of Additional Insured Person(s) Or Organization(s)
Bensalem Township School Distict 3000 Donallen Drive Bensalem , PA 19020
Information required to complete this Schedule, if not shown above, will be shown in the Declarations.

Section II – Who Is An Insured is amended to include as an additional insured the person(s) or organization(s) shown in the Schedule, but only with respect to liability for "bodily injury", "property damage" or "personal and advertising injury" caused, in whole or in part, by your acts or omissions or the acts or omissions of those acting on your behalf:

A. In the performance of your ongoing operations; or

B. In connection with your premises owned by or rented to you.

© ISO Properties, Inc., 2004

NATIONAL ALLIANCE OF NONPROFIT ORGANIZATIONS, LLC
MEMBERSHIP CERTIFICATE

This Certificate of Membership certifies that the person or entity named below is a member in good standing of the National Alliance of Nonprofit Organizations, LLC and therefore, is granted access to the Resources and Benefits made available to the general membership by the Association.

Date of Certification: 7/14/2026
Member ID Number: 2645823
Member Name: Cecelia Snyder Middle School PTO
Member Street Address: 3330 Hulmeville Rd
Bensalem , PA 19020

Authority granting this Certificate:
National Alliance of Nonprofit Organizations, LLC
Executive Director

BROKER OF RECORD
MEMORANDUM

Date: 7/14/2026
Regarding: Designated Broker of Record

Applicant Name: Cecelia Snyder Middle School PTO
Mailing Address: 3330 Hulmeville Rd
Bensalem , PA 19020

To Whom It May Concern:

DOXA Programs, LLC DBA R.V. Nuccio & Associates Insurance Brokers is hereby designated as our insurance Broker of Record, effective as of the date of this Broker of Record Memorandum, for the procurement and handling of our School Group insurance needs. This Broker of Record Memorandum supersedes any other outstanding Broker of Record letter or Broker Of Record designation you may have on file.

This Broker of Record is authorized by:
Nedra McCormac

Quote

08/10/2026

Project:
Belmont CGA10

From:
Singer Equipment Company
Alexander Nelinson
150 S Twin Vally Road
Elverson , PA 19520
800-422-8126
484-402-3895 (Contact)

Project Code: 204817 Job Reference Number: 204061

This is a quote (the "Quote") to provide equipment and/or services. This Quote includes the conditions presented below and the terms that are included at https://www.singerequipment.com/policies/quote-terms-conditions (the "Terms").

When you accept this Quote, as provided below, this Quote, together with the Terms, will form a binding contract (the "Contract") between you and Singer Equipment Company, Inc., ("Singer").

Item	Qty	Description	Sell	Sell Total
2	1 ea	**CONVECTION STEAMER, GAS** Cleveland Range Model No. 24CGA10.2 Steamcraft® Gemini™ 10 Convection Steamer, pressureless, gas, 2 compartments with individual generators, (5) 12 x 20 x 2-1/2 pans/compartment capacity, SureCook controls, easyTimer 90-minute timer with dial and LED digital readout in minutes and seconds, includes SureCook load compensating thermostat, manual cooking mode and descale indicator, left-hand hinged door, controls on right, 1 standard treated & tap water connection, stainless steel construction, 6" adjustable legs with flanged feet, 144,000 BTU total	$21,450.28	$21,450.28
	1 ea	1-year parts & labor warranty, standard		
	1 ea	K-12 WARRANTY Extended Warranty, not to exceed 36 months from date of installation (K-12 Schools only)		
	1 ea	K-12 & SENIOR LIVING PROMO Free water filter (FLT0040) or 50% off filter kit (FLT0040-KIT)		
	1 ea	5 year pro-rated parts warranty on boilers & steam generators		
	2 ea	3 year Convection Steamer Door Warranty, standard		
	1 ea	PERFORMANCE START-UP Performance start-up included at customer request after equipment is installed (free water quality check included) (mileage capped at 100 miles round trip) (contact Cleveland sales representative for details)		
	1 ea	FLT0040 Water Treatment System, dual-cartridge, reduces		<No Charge>

Item	Qty	Description	Sell	Sell Total
		sediments over 0.5 microns, reduces chlorine, includes (1) FLT0014 Activated Carbon Filter & Includes (1) FLT0018 Catalytic Carbon Filter		
	1 ea	Gas type to be specified		
	1 ea	(VOS115) 120v/60/1-ph, 2 blowers & controls, 150 watts each (DO NOT connect to GFI outlet)		
			ITEM TOTAL:	**$21,450.28**
			Total	$21,450.28

Prices are valid for 10 days unless otherwise noted herein, thereafter reconfirm.

In the event of an increase in U.S. published tariffs resulting in an increase of Singer's cost for Goods that are subject to a Proposal or an order by Customer, Singer may, prior to Customer's payment in full for such Goods, increase the price for such Goods by an amount equal to the increase of Singer's cost.

Unless otherwise noted herein, freight charges are NOT included.

Warranties

Manufacturer's standard warranties are included. No other warranty is extended or implied unless otherwise noted herein, and ALL OTHER WARRANTIES, EXPRESS OR IMPLIED, INCLUDING WITHOUT LIMITATION WARRANTIES OF FITNESS FOR A PARTICULAR PURPOSE, ARE DISCLAIMED TO THE FULLEST EXTENT ALLOWED BY LAW.

Taxes

Prices do not include sales nor use tax unless otherwise noted herein. All applicable taxes are subject to the current rate at time of final invoicing and are the responsibility of the customer.

Payment Terms

Unless otherwise noted herein, standard payment terms are 50% due at signing of quote and acceptance of terms and conditions, and the remaining balance will be due prior to delivery. Prices are quoted based on check or ACH as a form of payment. Credit card payment may incur a service charge on the total order.

See link to the Terms and Conditions, Return/Cancellation Section for the return and cancellation terms applicable to this Quote.

See link to the Terms and Conditions, Delivery Section, for delivery and shipping terms applicable to this Quote.

See link to the Terms and Conditions, Scope of Work Section, for the scope of Singer's work and exclusions therefrom applicable to this Quote.

Please read this quotation carefully as it is based upon our interpretation of the items being requested. Review this quotation for errors, omissions or inaccuracies of any kind. The customer is responsible to verify all measurements, directions of operation, voltages and utility specifications prior to ordering. Any changes to the above may incur a price adjustment.

TO ACCEPT THE QUOTE AND THE TERMS, AND TO CONFIRM OUR CONTRACT, PLEASE EITHER:

A. Select the "ACCEPT" button at the bottom of the screen which will prompt you to execute an electronic signature, which we accept. *By executing this Quote and the Contract hereby created, you are authorizing Singer to rely on your electronic signature as binding confirmation of your agreement to Contract. In addition, by executing this Quote, you are expressly acknowledging and agreeing to the Contract thereby created, comprised of this Quote and the Singer Terms, and the terms on each and every page of the Contract.*

Initial: _____

B. Print, sign and return this entire document to your Singer Representative or Copy and Paste this entire document into your confirming acceptance email and send the email to your Singer Representative.

As an authorized representative of the undersigned customer, the undersigned hereby confirms and accepts the terms of the Quote and the Terms at https://www.singerequipment.com/policies/quote- terms-conditions, which I hereby confirm on behalf of the Customer, I have reviewed and accepted, and thus confirm and the Contract between the undersigned Customer and Singer intending the undersigned Customer to be legally bound by the terms of the Contract hereby formed.

AS THE AUTHORIZED REPRESENTATIVE OF THE CUSTOMER, I FURTHER CONFIRM THAT ANY PRE-PRINTED TERMS THE CUSTOMER MAY INCLUDE ON ANY PURCHASE ORDER OR CONFIRMATION WILL NOT AMEND THIS QUOTE OR THE CONTRACT AND WILL NOT BE BINDING ON SINGER AND ARE EXPRESSLY EXCLUDED.

If you are an individual, YOU HEREBY CONFIRM THAT YOU ARE OF LEGAL AGE TO CONTRACT IN YOUR JURISDICTION (18 OR 19 DEPENDING UPON YOUR STATE), and are signing and returning this Contract as your voluntary act and deed, intending to be legally bound by this Contract, which includes the above Quote and the Terms at https://www.singerequipment.com/policies/quote-terms-conditions, both of which I hereby ACCEPT.

WE ACCEPT ELECTRONIC SIGNATURES. *By executing this Quote and the Contract hereby created, as the authorized representative of the Customer, you are authorizing Singer to rely on your electronic signature as binding confirmation of your agreement to Contract. In addition, by executing this Quote, on behalf of the Customer, you are expressly acknowledging and agreeing to the Contract thereby created, comprised of this Quote and the Singer Terms, and the terms on each and every page of the Contract.*

Insert name of customer: _____

By (signature): _____

Name (print): _____

Title (print): _____

Date: _____

SINGER FINANCE | Powered By LEAF

Get Started Today!

Apply Now for Flexible Financing with Singer Finance Powered by LEAF!

Fill Out Our Application at singerequipment.com/finance

Acceptance: _____ Date: _____

Printed Name: _____

Project Grand Total: $21,450.28

central Restaurant Products

Quote

08/11/2026

Project:
BENSALEM QUOTE # 2

From:
Central Restaurant Products
John Cordill
PO BOX 78070
Indianapolis, IN 46278
317-238-8356

Job Reference Number: 40800

Item	Qty	Description	Sell	Sell Total
1	1 ea	**CONVECTION STEAMER, GAS** Cleveland Range Model No. 24CGA10.2 Steamcraft® Gemini™ 10 Convection Steamer, pressureless, gas, 2 compartments with individual generators, (5) 12 x 20 x 2-1/2 pans/compartment capacity, SureCook controls, easyTimer 90-minute timer with dial and LED digital readout in minutes and seconds, includes SureCook load compensating thermostat, manual cooking mode and descale indicator, left-hand hinged door, controls on right, 1 standard treated & tap water connection, stainless steel construction, 6" adjustable legs with flanged feet, 144,000 BTU total	$24,472.61	$24,472.61
	1 ea	1-year parts & labor warranty, standard		
	1 ea	K-12 WARRANTY Extended Warranty, not to exceed 36 months from date of installation (K-12 Schools only)		
	1 ea	K-12 & SENIOR LIVING PROMO Free water filter (FLT0040) or 50% off filter kit (FLT0040-KIT)		
	1 ea	5 year pro-rated parts warranty on boilers & steam generators		
	2 ea	3 year Convection Steamer Door Warranty, standard		
	1 ea	PERFORMANCE START-UP Performance start-up included at customer request after equipment is installed (free water quality check included) (mileage capped at 100 miles round trip) (contact Cleveland sales representative for details)		
	1 kt	FLT0040-KIT Water Treatment Filtration Kit, with cartridge replacements - Includes: (1) FLT0040 Water Filter System with (3) FLT0014 Cartridges & (3) FLT0018 Cartridges		
	1 ea	Second year limited warranty on water related parts only when purchasing a steamer and filter from Cleveland. Must include a completed Performance Start-Up (See Cleveland warranty statement for details)		
	1 ea	Gas type to be specified		
	1 ea	(VOS115) 120v/60/1-ph, 2 blowers & controls, 150 watts each (DO NOT connect to GFI outlet)		



Item	Qty	Description	Sell	Sell Total
			ITEM TOTAL:	**$24,472.61**
			Merchandise	$24,472.61
			Freight	$1,500.00
			Installation	
			Total	$25,972.61

Acceptance: _____ Date: _____

Printed Name: _____

Project Grand Total: $25,972.61

Cleveland

SteamCraft® Gemini™ 10

TWO COMPARTMENT FLOOR MODEL DESIGN. PRESSURELESS CONVECTION STEAMER, TWIN, INDEPENDENT GAS-FIRED GENERATORS

Project _____

Item _____

Quantity _____

FCSI Section 11400 _____

Approved _____

Date _____

SteamCraft® Generator Style High Speed Convection Steamers

Models

- 24-CGA-10.2



Short Form Specifications

Shall be Two Compartments, Cleveland Convection Steamer series SteamCraft® Gemini™ 10, Model 24-CGA-10.2, Twin Gas Atmospheric Steam Generator, 72M BTU's input per compartment. Independent steam generator, gas valve and water level control system. Automatic Generator Blowdown. Steam Generator with Automatic Water Fill on start up. Exclusive remote probe-type water level controls. Exclusive Brass "Steam Jet" distribution system. Two-piece free-floating compartment door. Type 430 Stainless Steel exterior and cooking compartments. Pullout service drawer for controls and Gemini Drain/Power Control System. Exclusive Cold Water Condenser design. Choice of Compartment Controls. Manual By Pass for continuous steaming.

Standard Features

- Cooking Capacity for up to ten 12″ x 20″ x 2 1/2″ deep Cafeteria Pans, five each compartment.
- Totally independent cooking compartments, each has its' own generator, gas valve and water level controls - no shared components
- Exclusive High Efficiency Gas Power Burner (forced air) Generator: Produces more steam for faster cooking while lowering operating costs (72M BTU's per compartment)
- Easy Access Cleaning Port: Each generator has a deliming port located on the outside, top of the unit
- Generator Steam Standby Mode: Holds generator at a steaming temperature, allows unit to start cooking quickly
- Easytimer with 99 minute Digital Readout in minutes and seconds. Selector Dial with LED Light Descale Indicator. Sure Cook load compensating timer. Manual Constant Steam Mode.
- Exclusive Two-Piece Compartment door: Slammable, self-adjusting door provides and airtight seal, reversable door gasket for extended life
- Exclusive Gemini Drain/Power Control System: Simple, reliable 1/2" ball valve style drain automatically turns power ON/OFF
- Exclusive Brass Steam Jets distribute even-high velocity steam throughout cooking compartment for faster cooking times
- Easy, Front -Access Generator Controls comes with a pullout drawer for simple servicing of unit
- 6″ Stainless Steel Adjustable Legs with Flanged Feet
- Approvals: CSA (AGA, CSA) and U.L/NSF#4
- Compartment Steam Shut-Off Switch when compartment door is opened
- Field Reversible Door Hinging.

Options & Accessories

- Propane Gas (PG)
- Dissolve® Descale Solution, 6 one gallon container w/quart markings (106174)
- Water Filters

KE004046-23

760 Beta Drive, Unit D
Mayfield Village, Ohio 44143

Tel 1.216.481.4900
Fax 1.216.481.3782
Email steam@clevelandrange.com

Timeless Quality, Trusted For Life ®

Cleveland

SteamCraft® Generator Style High Speed Convection Steamers

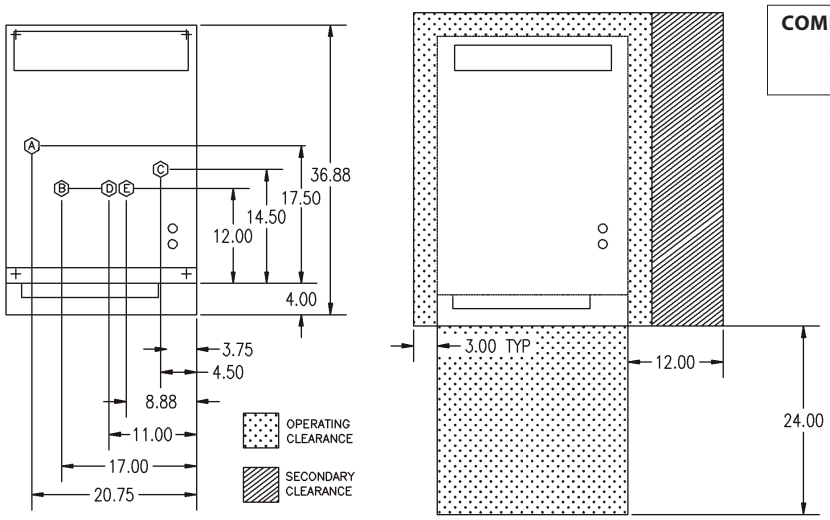

COMPARTMENT HAS CAPACITY FOR:

- Five, 12˝ x 20˝ x 21⁄2˝ deep Cafeteria Pans

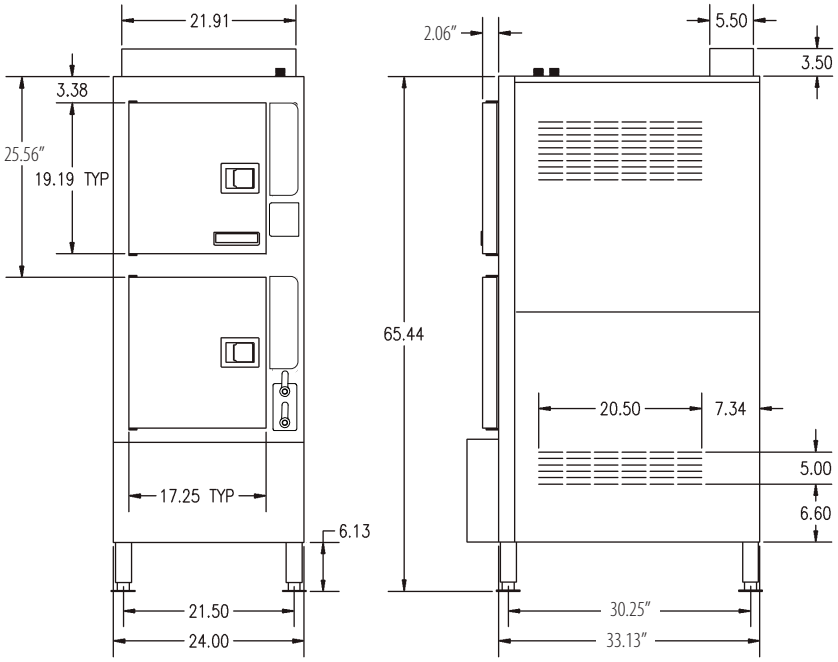

WATER QUALITY REQUIREMENTS (Boilers, Generators)

TTDS:	50-250 ppm
Hardness:	50 - 200 mm (3 - 12 gpg)
pH value:	7.0 - 8.5
CL (Chloride):	max 50 ppm
Cl2 (free chlorine):	max 0.1 ppm
SiO2 (silica):	max 13 ppm
NH2Cl: (mono-chloramine)	max 0.1 ppm
Total Alkalinity:	50 - 100 ppm

(A) GAS			(B) ELECTRIC	(CD) COLD WATER	CLEARANCE	(E) DRAINAGE
1¼˝ IPS line size, ¾˝ connection			120V-1Phase, 60 Hz.	35 psi minimum	Right - 3", Left - 3", Rear -3"	1/2˝ IPS-M
NATURAL	PROPANE	BTU	2 Blowers & Controls	60 psi maximum	(12" on control side if adjoining wall or equipment is over 30" high for service access)	Do not connect other units to this drain
Piping ¾˝ N.P.T. Supply pressure 4.50˝ W.C. Min. 14.00˝ W.C. Max.	Piping ¾˝ N.P.T. Supply pressure 11.00˝ W.C. Min. 14.00˝ W.C. Max.	72,000 each Generator, 144,000 total	150 watts each ** Do not connect to GFI outlet. See note below.	1/2˝ IPS-M NPT for Generator 1/2˝ IPS-M NPT for Condenser	**Contact factory for variances to clearances.**	Drain must not be located beneath the steamer itself Preferred floor drain location should be a minimum distance (from the unit) of at least 12" from the left side, 12" from the right side, 6" from the front and 6" from the rear. Do not use PVC pipe
Manufacturer must be notified if unit will be used above 2,000 feet						

NOTES:
**DO NOT CONNECT TO GFI OUTLET. CLEVELAND RANGE RECOMENTS GAS FIRED 120 VOLT STEAMERS BE HARD WIRED DIRECTLY TO ELECTRICAL SYSTEM.
Cleveland Range reserves right of design improvement or modification, as warranted.
Many regional, state and local codes exist and it is the responsibility of the owner and installer to comply with the codes.
Cleveland Range equipment is built to comply with applicable standards for manufacturers. Included among those approval agencies are U.L/NSF#4 and CSA (AGA, CGA).

(NOT TO SCALE)

760 Beta Drive, Unit D
Mayfield Village, Ohio 44143

Tel 1.216.481.4900
Fax 1.216.481.3782
Email steam@clevelandrange.com

www.clevelandrange.com

Timeless Quality, Trusted For Life ®

Cleveland

FLT0040

FOODSERVICE WATER TREATMENT SYSTEM

Project _____

Item _____

Quantity _____

FCSI Section 11400 _____

Approved _____

Date _____

High Efficiency Boilerless Steamchef™ Convection Steamers

Models

- FLT0040



Installation & Operating Tips

- Feed-water connection to system should be COLD only.
- Do not exceed system specifications for temperature and pressure.
- Allow 3" clearance below system for filter cartridge removal and cartridge replacement.
- To be used for treated water connection only.
- Detailed installation, operation and maintenance manual included with each system.

- Change cartridges on a regular six (6) month preventative maintenance program.
- Change cartridges when capacity is reached or when flow becomes too slow.
- Always flush the filter cartridge at time of
- installation and cartridge change.

- Service Flow Rate: 2.5 gpm (9.5 lpm)
- Rated Capacity: 20,000 gals. (75,708 L)

Standard Features

- Patented scale inhibiting technology, helps protect equipment against scale and corrosion for the rated capacity of the system
- Reduces maintenance frequency and cost, and extends equipment life.
- Gradient-density sediment filtration protects against dirt, rust and other debris.
- FLT0014 cartridge - Activated carbon filtration protects equipment against corrosive chlorine.
- FLT0018 cartridge - Catalytic carbon provides added protection against chloramines when present in water supplies and IsoNet provides scale inhibition.
- New manifold design provides fewer possible leak points.
- Sturdy, powder-coated mounting bracket and multi-function valve simplify installation.
- Multi-function valve provides:
  - Shutoff valve for quick and simple filter replacements
  - System bypass valve for easy system maintenance
  - Flush port to flush cartridges after installation
- Built-in pressure gauge allows visual monitoring of when filters need to be changed.
- Utilizes cartridges that make changing filters quick, easy and sanitary.

KE004046-6 Rev C

760 Beta Drive, Unit D
Mayfield Village, Ohio 44143

Tel 1.216.481.4900
Fax 1.216.481.3782
Email steam@clevelandrange.com

Timeless Quality, Trusted For Life ®

Cleveland

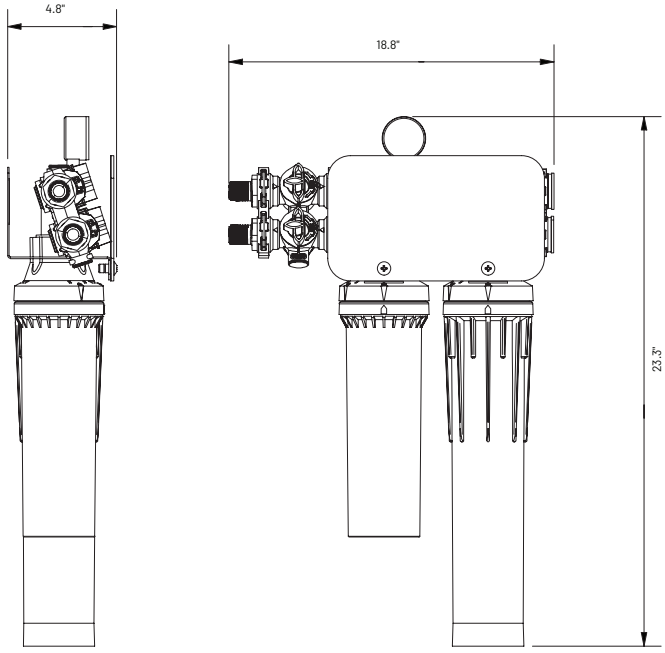

Specifications

- Service Flow Rate
  Maximum 2.5 gpm (9.5 Lpm)
- Rated Capacity
  20,000 gallons (75,708 L)
- Pressure Requirements
  10 – 125 psi (0.7 – 8.6 bar), non-shock
- Temperature
  35 – 100°F (2 – 38°C)
- Overall Dimensions
  23.3" L x 14.3" W x 4.8" D
  59.2 cm x 36.3 cm x 12.2 cm

- Inlet Connection
  Inlet Connection: 1/2" MNPT
- Outlet Connection
  Outlet Connection: 1/2" MNPT
- Shipping Weight
  9 lbs (4.1 kgs)
- Electrical Connection None required

WATER FILTERS GUIDELINES FOR CLEVELAND STEAMERS

		MAXIMUM FLOW RATE *				SIZING RECOMMENDATIONS				
MODEL	INTIAL FILL AT START UP (Gallons)	MAX GAL./MIN	MAX GAL./HOUR	MAX GAL./HOUR/PAN	MAX GAL./DAY (8 Hour Day)	MEETS WATER REQUIRMENTS Cleveland P/N	DOES NOT MEET REQUIREMENTS - REVERSE OSMOSIS WITH MINERAL ADDITION Cleveland P/N	SUGGESTED FILTER CHANGE FREQUENCY	RO PRODUCTION GPD OPTIMAL (77 F)	STORAGE TANK CAPACITY
STEAMCHEF SERIES (BOILERLESS)										
22CET3.1 - Energy Star	1.10	0.07	4.0	1.3	32.00	**FLT0040**	**FLT0031**	ANNUAL	175	16
22CET6.1 - Energy Star	1.10	0.07	4.0	0.7	32.00	**FLT0040**	**FLT0031**	ANNUAL	176	16
22CGT3.1 - Energy Star	1.10	0.07	4.0	1.3	32.00	**FLT0040**	**FLT0031**	ANNUAL	177	16
22CGT6.1 - Energy Star	1.10	0.07	4.0	0.7	32.00	**FLT0040**	**FLT0031**	ANNUAL	165	16
STEAMCRAFT-COUNTER TOP (GENERATORS)								ANNUAL		
21CET8	2.80	0.057	3.42	1.1	27.36	**FLT0040**	**FLT0031**	ANNUAL	175	16
21CET16	3.80	0.113	6.78	1.4	54.24	**FLT0040**	**FLT0026**	ANNUAL	175	16
21CGA5	4.00	0.113	6.78	1.4	54.24	**FLT0040**	**FLT0026**	ANNUAL	175	16
10 PAN MODELS (GENERATORS)										
24CGA10	7.90	0.185	11.10	1.1	88.80	**FLT0040**	**FLT0027**	6 MONTHS	350	50
24CGA10.2	3.30	0.194	11.64	2.3	93.12	**FLT0040**	**FLT0027**	6 MONTHS	350	50
24CGA10.2ES Energy Star	3.30	0.132	7.90	1.6	63.20	**FLT0040**	**FLT0026**	6 MONTHS	350	16
24CEA10	3.80	0.113	13.56	2.7	108.48	**FLT0040**	**FLT0027**	6 MONTHS	350	50
24CGP10	16.00	0.360	21.60	2.2	172.80	**FLT0040**	**FLT0012**	3 MONTHS	1400	50
CLASSIC CONVECTION SERIES (BOILER BASE)										
200,000 BTU Boilers (24CGM200)	8.00	0.2500	15.00	2.5	120.00	**FLT0040**	**FLT0012**	6 MONTHS	1400	50
300,000 BTU Boilers (36CGM300, 36CGM16300)	12.00	0.3600	21.60	2.2	172.80	**FLT0040**	**FLT0012**	3 MONTHS	1400	50
24 kW Boilers (24CEM24)	9.00	0.1600	9.60	1.0	76.80	**FLT0040**	**FLT0027**	6 MONTHS	350	50
36kW Boilers (24CEM36)	9.00	0.2400	14.40	1.4	115.20	**FLT0040**	**FLT0012**	6 MONTHS	1400	50
48 kW Boilers (24CEM48)	9.00	0.3000	18.00	1.8	144.00	**FLT0040**	**FLT0012**	3 MONTHS	1400	50
CLASSIC PRESSURE SERIES (BOILER BASE)										
24 kW Boilers PEM24	9.00	0.1600	9.60	1.0	76.80	**FLT0040**	**FLT0027**	6 MONTHS	350	50
36kW Boilers PEM36	9.00	0.2400	14.40	1.4	115.20	**FLT0040**	**FLT0012**	6 MONTHS	1400	50
48 kW Boilers PEM48	9.00	0.3000	18.00	1.8	144.00	**FLT0040**	**FLT0012**	3 MONTHS	1400	50

*** Max Flow Rate is when steamer is cooking continuously. Idle mode uses significantly less water.**

System Tested and certified by IAPMO R&T to NSF/ANSI Standard 42:

AESTHETIC EFFECTS

Chemical Reduction
Chlorine, Chloramine, Taste & Odor

Mechanical Filtration
Nominal Particulate Class III

NOTES:
Cleveland Range reserves right of design improvement or modification, as warranted.
Many regional, state and local codes exist and it is the responsibility of the owner and installer to comply with the codes.
Cleveland Range equipment is built to comply with applicable standards for manufacturers. Included among those approval agencies are U.L/NSF#4 and CSA (AGA, CGA).

(NOT TO SCALE)

760 Beta Drive, Unit D
Mayfield Village, Ohio 44143

Tel 1.216.481.4900
Fax 1.216.481.3782
Email steam@clevelandrange.com

www.clevelandrange.com

Timeless Quality, Trusted For Life ®

KE004046-6

BradyPLUS
Solutions for Foodservice Equipment & Supplies

Quote

08/10/2026

To:
Bensalem School District
Jenna Demirjian
3000 Donallen Dr
Bensalem, PA 19020

Project:
Belmount Elementary -Bensalem SD 10 PAN
5000 Neshaminy Blvd
Bensalem , Pa 19020

From:
Penn Jersey
Jim Thorpe
9355 Blue Grass Road
Philadelphia, PA 19114-2311
(215)671-9800

Job Reference Number: 73359-10

THANK YOU FOR ALLOWING US THE OPPORTUNITY TO BE OF SERVICE TO YOU. WE STRIVE TO EARN YOUR BUSINESS EVERY DAY. PLEASE NOTE THAT SPECIAL ORDERS ARE LIKELY TO BE SUBJECT TO FREIGHT FROM THE MANUFACTURER -- UNLESS SPECIFIED OTHERWISE.

Due to circumstances beyond our control, additional charges may apply in the future because of changes to U.S.-sanctioned tariffs on foreign-produced products. These potential cost increases were not available or foreseeable at the time the original quote was provided. By accepting this quote, you acknowledge and accept that any such tariff-related adjustments will be applied in accordance with the prevailing rates established by U.S. authorities at the time of import

Item	Qty	Description	Sell	Sell Total

2	1 ea	**CONVECTION STEAMER, GAS** Cleveland Range Model No. 24CGA10.2 Steamcraft® Gemini™ 10 Convection Steamer, pressureless, gas, 2 compartments with individual generators, (5) 12 x 20 x 2-1/2 pans/compartment capacity, SureCook controls, easyTimer 90-minute timer with dial and LED digital readout in minutes and seconds, includes SureCook load compensating thermostat, manual cooking mode and descale indicator, left-hand hinged door, controls on right, 1 standard treated & tap water connection, stainless steel construction, 6" adjustable legs with flanged feet, 144,000 BTU total Dimensions 65.5(h) x 24(w) x 33(d)	$28,253.61	$28,253.61
	1 ea	1-year parts & labor warranty, standard		
	1 ea	K-12 WARRANTY Extended Warranty, not to exceed 36 months from date of installation (K-12 Schools only)		
	1 ea	K-12 & SENIOR LIVING PROMO Free water filter (FLT0040) or 50% off filter kit (FLT0040-KIT)		
	1 ea	5 year pro-rated parts warranty on boilers & steam generators		
	2 ea	3 year Convection Steamer Door Warranty, standard		
	1 ea	PERFORMANCE START-UP Performance start-up included at customer request after equipment is installed (free water quality check included) (mileage capped at 100 miles round trip) (contact Cleveland sales representative for details)		
	1 ea	Replacement		
	1 ea	Note: When ordering installation, A site survey must be completed before equipment will be released for shipment. This ensures that the correct equipment arrives on location based on readiness and location of utilities, drain, and transportation constraints such as doorway dimensions		
	1 ea	FLT0040 Water Treatment System, dual-cartridge, reduces sediments over 0.5 microns, reduces chlorine, includes (1) FLT0014 Activated Carbon Filter & Includes (1) FLT0018 Catalytic Carbon Filter **K-12 & SENIOR LIVING PROMO, Free water filter (FLT0040) or 50% off filter kit (FLT0040-KIT)**		<Included>
	1 ea	Natural Gas		
	1 ea	(VOS115) 120v/60/1-ph, 2 blowers & controls, 150 watts each (DO NOT connect to GFI outlet)		
			ITEM TOTAL:	**$28,253.61**
*	1 ea	**FREIGHT** Cleveland Range Model No. INBOUND SHIPPING estimated inbound freight for item #2	$789.00	$789.00
			ITEM TOTAL:	**$789.00**

Item	Qty	Description	Sell	Sell Total
2.1	1 ea	**SERVICES:** PJP Model No. DUASIP DELIVER, UNCRATE, ASSEMBLE AND SET IN PLACE INCLUDING REMOVAL OF OLD DISCONECTED STEAMER. Per plan if applicable – level & adjust as needed, remove factory plastic protective wrap and any other packaging materials, discard trash in site waste area or dumpster Please note - For equipment deliveries or projects, all site prep, permits, plumbing and electrical work is not in the scope of our work unless noted. All labor is non-union and performed during our normal workday hours of Monday - Friday 7AM-5PM unless otherwise noted.	$295.00	$295.00
			ITEM TOTAL:	**$295.00**

Subtotal	$29,337.61
Total	$29,337.61

Customer Delivery Verification

Please complete the information below to insure accuracy of delivery

Types of Delivery

Route Truck to Loading Dock: (One Man) – There is no charge for a delivery that would only require a single driver who can back up to the loading dock. The client would pull off the skid off the truck

Route Truck to Ground: (One-man) – There is no charge for the delivery of equipment that can be pushed to the tailgate by a single driver and lowered to the ground

Equipment Truck with Lift Gate (Two Men) **-** There will be a charge for large pieces of equipment, such as, two door refrigerators, 10 burner ovens. These items would require two men to push them to the lift gate and lower it to the ground.

Equipment Truck with Loading Dock (Two Men) - There will be a charge for large pieces of equipment, such as, two door refrigerators, 10 burner ovens. These items would require two men to bring the items to the back of the truck so they could be pulled off by the client.

Uncrate, Assemble & Set-in Place- Removal of all trash**.** There will be a charge for this service. This will be priced based on the circumstance of the delivery. Final utility connections are by others. Installation team will deliver and set in place goods and services if requested by our customers at an agreed upon cost structure. If delivery site conditions are not site ready and safe for delivery, and these conditions require install team to make a second delivery to the job or delivery site, Secondary re-delivery charges will be communicated and required and will need to be agreed to prior to the re-delivery being made.

Delivery Needed:

_____ Direct Ship from Manufacturer

_____ Truck

_____ Deliver / Set-in-place (If Quoted Above)

Truck Information:

_____ Loading Dock on site

_____ Lift Gate Required

Utility Requirements: Circle those that apply and indicate the electrical service at the location

Gas Specs: Natural Gas Liquid Propane **Electrical Specs:** Voltage_____ Phase (1 or 3)____

Entryway Measurements:

Outside Door: _____ Inside Door: _____ Are there stairs? Y N How Many: _____

Delivery Address:

_____ Same as listed above

_____ Deliver to new Address Below

Street: _____

Street: _____

City: _____ State: _____ Zip: _____

-Plus applicable sales tax

-Custom order equipment and smallwares are not returnable.

-Most special order items are not returnable, if the item is returnable it must be in the original crating. Any returned special order item will be subject to restocking and freight fee.

-All deliveries may be subject to delivery fees depending on method of delivery or services needed.

-For well qualified buyers, low leasing interest rates are available for all your food service equipment needs. Please contact your sales representative for more information. All leasing opportunities must be pre-funded in full.

Please note that special orders are subject to freight from the manufacturer -- unless specified otherwise. Freight is estimated at 10% of the total order value for most items, 15% for flatware and china, 20% for rubber and vinyl

matting. Contact your PJP representative if you would like a more accurate freight estimate.

CREDIT CARD STATEMENT:

-All equipment, materials and labor contained in this proposal have been quoted at net pricing, because of associated bank fees, credit cards as a method of payment, will only be accepted when a 3.5-5% fee charge is added to the purchase price on all goods and services.

-All pricing is held firm for **30** days from the date of quote. After 30 days pricing is subject to manufacturer's price increases.

-Standard Terms: 50% deposit, 50% on delivery

-Deposit requirements could increase based on customer account status and method of delivery

-In the event installation of work scope is delayed more than 60 days due to conditions outside of Contractor's control, owner will be invoiced for full contract amount less 10% retainage.

I understand by signing and executing this contract/quote that I am agreeing to all the terms, conditions and content stated in this contract.

I have reviewed my quote and confirm that there is reasonable access into my facility through the outside doorways, as well as access into the areas/locations in which my equipment is to be set-in place. If at the time of delivery the driver cannot get the equipment into the set-in-place locations, and I choose to refuse and return the order, I agree to pay a restocking fee of 25 % plus return freight.

Acceptance: _____ Date: _____

Printed Name: _____

Project Grand Total: $29,337.61

Quote

08/11/2026

Project:
Bensalem Steamer 10

From:
Douglas Equipment
Marty Zabib
19 W College Ave
Suite 350
Yardley, PA 19067
304-327-0149
215-595-3608 (Contact)

Job Reference Number: 181353

Item	Qty	Description	Sell	Sell Total
1	1 ea	**CONVECTION STEAMER, GAS** Cleveland Range Model No. 24CGA10.2 Steamcraft® Gemini™ 10 Convection Steamer, pressureless, gas, 2 compartments with individual generators, (5) 12 x 20 x 2-1/2 pans/compartment capacity, SureCook controls, easyTimer 90-minute timer with dial and LED digital readout in minutes and seconds, includes SureCook load compensating thermostat, manual cooking mode and descale indicator, left-hand hinged door, controls on right, 1 standard treated & tap water connection, stainless steel construction, 6" adjustable legs with flanged feet, 144,000 BTU total	$21,735.99	$21,735.99
	1 ea	1-year parts & labor warranty, standard		
	1 ea	K-12 WARRANTY Extended Warranty, not to exceed 36 months from date of installation (K-12 Schools only)		
	1 ea	5 year pro-rated parts warranty on boilers & steam generators		
	2 ea	3 year Convection Steamer Door Warranty, standard		
	1 ea	PERFORMANCE START-UP Performance start-up included at customer request after equipment is installed (free water quality check included) (mileage capped at 100 miles round trip) (contact Cleveland sales representative for details)		
	1 ea	11000116002 Disposal Of Old Equipment, (Note: Pricing based on 100 mile round trip, additional charges may apply, see Installation flyer for details) (Note: Customer should indicate your preferred Welbilt Authorized Service Agent for installation on the PO otherwise Welbilt RISE will select an Authorized Service Agent for this install) (Non-discountable NET pricing) (Only applicable for continental US)	$359.30	$359.30
	1 kt	FLT0040-KIT Water Treatment Filtration Kit, with cartridge replacements - Includes: (1) FLT0040 Water Filter System with (3) FLT0014 Cartridges & (3) FLT0018 Cartridges	$989.48	$989.48
	1 ea	Second year limited warranty on water related parts only when purchasing a steamer and filter from Cleveland. Must include a		

Initial: _____

Item	Qty	Description	Sell	Sell Total
		completed Performance Start-Up (See Cleveland warranty statement for details)		
	1 ea	Natural Gas		
	1 ea	(VOS115) 120v/60/1-ph, 2 blowers & controls, 150 watts each (DO NOT connect to GFI outlet)		
			ITEM TOTAL:	**$23,084.77**
4	1 ea	**COSTARS** Custom 036-E25-064		
			Total	$23,084.77

Acceptance: _____ Date: _____

Printed Name: _____

Project Grand Total: $23,084.77

Belmont Steamer Quote Comparison

Vendor	Cleveland SteamCraft Gemini 10
Singer	$21,450.28
PJP	$29,337.61
Central Restaurant Products	$25,972.61
Douglas Equipment	$23,084.77

Email with specs sent on 8/10/26 to the vendors below:
Singer, PJP, Central Restaurant Products, Douglas Equipment

Notes:
*Prices include delivery, uncrate and set in place, and removal of old unit.

Pennsylvania
Department of Education

Bureau of Food and Nutrition

The chart below outlines the procurement thresholds as cited in the regulations.

2026 Procurement Chart

Program	School Nutrition Programs (SNP)	Summer Food Service Program (SFSP)	Child and Adult Care Food Program (CACFP)	
Services and Perishable Products	**Amount**	**Amount**	**Amount**	**Method**
	≤$15,000	≤$15,000	≤$15,000	Micro
	>$15,000 - ≤$350,000	>$15,000 - ≤$350,000	>$15,000 - ≤$350,000	Informal
	>$350,000	>$350,000	>$350,000	Formal
Non-Perishable Products	**Amount**	**Amount**	**Amount**	**Method**
	≤$13,200	≤$15,000	≤$15,000	Micro
	>$13,200 - <$24,500	>$15,000 - ≤$350,000	>$15,000 - ≤$350,000	Informal
	≥$24,500	>$350,000	>$350,000	Formal
Vended Meals	**Amount**	**Amount**	**Amount**	**Method**
	N/A	N/A	N/A	Micro
	≤$350,000	≤$350,000	≤$350,000	Informal
	>$350,000	>$350,000	>$350,000	Formal
Full-Service FSMC	**Amount**	**Amount**	**Amount**	**Method**
	N/A	N/A	N/A	Micro
	N/A	N/A	N/A	Informal
	>$0	N/A	N/A	Formal
Notes	Non-Perishable: Canned goods, dry goods, supplies, equipment, etc.			
	Equipment ≥$10,000 must have prior approval from the Bureau of Food and Nutrition (BFN). (Changes from ≥$5,000 to ≥$10,000 starting July 1, 2025).			
	Procurement Method and Procedure			
	Micro-purchase: Non-competitive			
	Informal/Small (simplified acquisitions): Quotes (3 quotes for SNP, 2 quotes for SFSP and CACFP)			
	Formal/Large: Invitation for Bid (IFB) or Request for Proposal (RFP)			

For general procurement questions, contact RA-EDPROCUREMENT@pa.gov.
For questions pertaining to procuring vended meals or FSMCs, contact RA-FSMC@pa.gov.

Contract Form

This Contract is made and entered into this 26th day of June, 2026 ("Effective Date") by and between the Southeastern PA Buying Group (hereinafter, "SEPA") and **IMPERIAL BAG & PAPER CO. LLC, BRADY INDUSTRIES, LLC, and their Affiliates, divisions and locations operating in the US** (the "Contractor").

Whereas, Contractor submitted a Bid in connection with SEPA's procurement of paper products (the "Products") as an indefinite quantity of goods and services contract as detailed in the Specifications incorporated in the Contract Documents;

Whereas, SEPA notified Contractor that it was the lowest responsive and responsible Bidder for some or all of the Products;

Whereas, Contractor executes this Contract Form to memorialize its acceptance of the terms and conditions of the Contract.

Now therefore, for the consideration stated herein and other good and valuable consideration, the sufficiency of which is expressly acknowledged by both parties, and intending to be legally bound hereby, the parties mutually agree as follows:

1. Capitalized terms not defined herein shall have the same means as set forth in the Instructions to Bidders or General Conditions of the Contract, as applicable.

2. Contractor agrees to furnish all Products requested by SEPA m writing m accordance with the Contract Documents.

3. Upon written request from SEPA, Contractor shall supply the Products to SEPA Members at the unit prices then applicable to the Products for this Rollover Term (as defined below), as agreed upon by SEPA and Contractor.

4. The quantities of Products listed in the Specifications and/or Bid Form are merely estimates of SEPA Member's needs. SEPA Members reserve the right to purchase more, less or none of the Products as each SEPA Member determines it requires in its sole and absolute discretion. The Products will be requisitioned by each SEPA Member on an as-needed basis throughout the duration of the Contract.

5. This Contract shall commence on July .1;2026 and shall expire on June 30, 2027 (the "Rollover Term") unless otherwise terminated earlier in accordance with the Contract Documents. SEP A reserves the right to extend the Contract upon written notice to Contractor, on the same terms and conditions, for an additional three (3) months for purposes of transitioning the supply of Products to another supplier. Upon satisfactory performance, and with mutual agreement between SEPA and Contractor, this contract may be extended for four additional years, in one-year increments. The extensions must be with the same conditions, specifications and discounts holding. Total possible length of this contract is five years.

6. The entire integrated agreement between SEPA and Contractor in connection th the Project includes this Contract Form, the completed Bid Form, SEPA's notice to Contractor of which Products Contractor has been awarded, any other completed forms required by the Specifications, and the Bid Documents, all of which are incorporated herein by reference.

IN WITNESS WHEREOF, the Contractor and SEPA cause this Contract to be signed, sealed and delivered as of the day and year first above written.

Contractor:

Oscar Garcia (Jul 6, 2026 11:45:23 EDT)

Signature

Oscar Garcia

Name and Title

President, Northeast Region

Southeastern PA Buying Group:

Signature

Jessica R. Oldsey

Jessica Oldsey, Authorized Representative

IMPERIAL- CONTRACT FORM- 26-27 ROLLOVER (ID v. 1)

Final Audit Report 2026-07-06

Created:	2026-06-26
By:	Daniel Gill (dgill@imperialdade.com)
Status:	Signed
Transaction ID:	CBJCHBCAABAA0gMGSAUv_5HMTTw2yBgR8HU0D9vYRQoF

"IMPERIAL- CONTRACT FORM- 26-27 ROLLOVER (ID v. 1)" History

Document created by Daniel Gill (dgill@imperialdade.com)
2026-06-26 - 6:24:24 PM GMT

Document emailed to ogarcia@imperialdade.com for signature
2026-06-26 - 6:25:29 PM GMT

Email viewed by ogarcia@imperialdade.com
2026-07-06 - 3:44:07 PM GMT

Signer ogarcia@imperialdade.com entered name at signing as Oscar Garcia
2026-07-06 - 3:45:21 PM GMT

Document e-signed by Oscar Garcia (ogarcia@imperialdade.com)
Signature Date: 2026-07-06 - 3:45:23 PM GMT - Time Source: server - Signature Appearance Selected: MOBILE_DRAW

Agreement completed.
2026-07-06 - 3:45:23 PM GMT

Contract Form

This Contract is made and entered into this __9th____ day of _____June_, 2026 ("Effective Date") by and between the Southeastern PA Buying Group (hereinafter, "SEPA") and _____Georgeo's Water Ice Inc._____ (the "Contractor").

Whereas, Contractor submitted a Bid in connection with SEPA's procurement of ice cream products (the "Products") as an indefinite quantity of goods and services contract as detailed in the Specifications incorporated in the Contract Documents;

Whereas, SEPA notified Contractor that it was the lowest responsive and responsible Bidder for some or all of the Products;

Whereas, Contractor executes this Contract Form to memorialize its acceptance of the terms and conditions of the Contract.

Now therefore, for the consideration stated herein and other good and valuable consideration, the sufficiency of which is expressly acknowledged by both parties, and intending to be legally bound hereby, the parties mutually agree as follows:

1. Capitalized terms not defined herein shall have the same means as set forth in the Instructions to Bidders or General Conditions of the Contract, as applicable.

2. Contractor agrees to furnish all Products requested by SEPA in writing in accordance with the Contract Documents.

3. Upon written request from SEPA, Contractor shall supply the Products to SEPA Members at the unit prices identified in Contractor's Bid Form within applicable time limits.

4. The quantities of Products listed in the Specifications and/or Bid Form are merely estimates of SEPA Member's needs. SEPA Members reserve the right to purchase more, less or none of the Products as each SEPA Member determines it requires in its sole and absolute discretion. The Products will be requisitioned by each SEPA Member on an as-needed basis throughout the duration of the Contract.

5. This Contract shall commence on July 1, 2026 and shall expire on June 30, 2027 unless otherwise terminated earlier in accordance with the Contract Documents. SEPA reserves the right to extend the Contract upon written notice to Contractor, on the same terms and conditions, for an additional three (3) months for purposes of transitioning the supply of Products to another supplier. Upon satisfactory performance, and with mutual agreement between SEPA and Contractor, this contract may be extended for four additional years, in one year increments. The extensions must be with the same conditions, specifications and discounts holding. Total possible length of this contract is five years.

6. The entire integrated agreement between SEPA and Contractor in connection with the Project includes this Contract Form, the completed Bid Form, SEPA's notice to Contractor of which Products Contractor has been awarded, any other completed forms required by the Specifications, and the Bid Documents, all of which are incorporated herein by reference.

IN WITNESS WHEREOF, the Contractor and SEPA cause this Contract to be signed, sealed and delivered as of the day and year first above written.

Contractor:

Signature

George Swyngim President

Name and Title

Southeastern PA Buying Group:

Signature

Jessica Oldsey

Jessica Oldsey, Authorized Representative

Contract Form

This Contract is made and entered into this 12th day of June, 2026 ("Effective Date") by and between the Southeastern PA Buying Group (hereinafter, "SEPA") and Hershey Ice Cream (the "Contractor").

Whereas, Contractor submitted a Bid in connection with SEPA's procurement of ice cream products (the "Products") as an indefinite quantity of goods and services contract as detailed in the Specifications incorporated in the Contract Documents;

Whereas, SEPA notified Contractor that it was the lowest responsive and responsible Bidder for some or all of the Products;

Whereas, Contractor executes this Contract Form to memorialize its acceptance of the terms and conditions of the Contract.

Now therefore, for the consideration stated herein and other good and valuable consideration, the sufficiency of which is expressly acknowledged by both parties, and intending to be legally bound hereby, the parties mutually agree as follows:

1. Capitalized terms not defined herein shall have the same means as set forth in the Instructions to Bidders or General Conditions of the Contract, as applicable.

2. Contractor agrees to furnish all Products requested by SEPA in writing in accordance with the Contract Documents.

3. Upon written request from SEPA, Contractor shall supply the Products to SEPA Members at the unit prices identified in Contractor's Bid Form within applicable time limits.

4. The quantities of Products listed in the Specifications and/or Bid Form are merely estimates of SEPA Member's needs. SEPA Members reserve the right to purchase more, less or none of the Products as each SEPA Member determines it requires in its sole and absolute discretion. The Products will be requisitioned by each SEPA Member on an as-needed basis throughout the duration of the Contract.

5. This Contract shall commence on July 1, 2026 and shall expire on June 30, 2027 unless otherwise terminated earlier in accordance with the Contract Documents. SEPA reserves the right to extend the Contract upon written notice to Contractor, on the same terms and conditions, for an additional three (3) months for purposes of transitioning the supply of Products to another supplier. Upon satisfactory performance, and with mutual agreement between SEPA and Contractor, this contract may be extended for four additional years, in one year increments. The extensions must be with the same conditions, specifications and discounts holding. Total possible length of this contract is five years.

6. The entire integrated agreement between SEPA and Contractor in connection with the Project includes this Contract Form, the completed Bid Form, SEPA's notice to Contractor of which Products Contractor has been awarded, any other completed forms required by the Specifications, and the Bid Documents, all of which are incorporated herein by reference.

IN WITNESS WHEREOF, the Contractor and SEPA cause this Contract to be signed, sealed and delivered as of the day and year first above written.

Contractor:

Signature

Rich White Branch Manager

Name and Title

Southeastern PA Buying Group:

Signature

Jessica Oldsey

Jessica Oldsey, Authorized Representative

Contract Form

This Contract is made and entered into this 13 day of May, 2026 ("Effective Date") by and between the Southeastern PA Buying Group (hereinafter, "SEPA") and Lehigh Valley Dairy (the "Contractor").

Whereas, Contractor submitted a Bid in connection with SEPA's procurement of milk products (the "Products") as an indefinite quantity of goods and services contract as detailed in the Specifications incorporated in the Contract Documents.

Whereas, SEPA notified Contractor that it was the lowest responsive and responsible Bidder for some or all of the Products.

Whereas, Contractor executes this Contract Form to memorialize its acceptance of the terms and conditions of the Contract.

Now therefore, for the consideration stated herein and other good and valuable consideration, the sufficiency of which is expressly acknowledged by both parties, and intending to be legally bound hereby, the parties mutually agree as follows:

1. Capitalized terms not defined herein shall have the same means as set forth in the Instructions to Bidders or General Conditions of the Contract, as applicable.

2. Contractor agrees to furnish all Products requested by SEPA in writing in accordance with the Contract Documents.

3. Upon written request from SEPA, Contractor shall supply the Products to SEPA Members at the unit prices identified in Contractor's Bid Form within applicable time limits.

4. The quantities of Products listed in the Specifications and/or Bid Form are merely estimates of SEPA Member's needs. SEPA Members reserve the right to purchase more, less or none of the Products as each SEPA Member determines it requires in its sole and absolute discretion. The Products will be requisitioned by each SEPA Member on an as-needed basis throughout the duration of the Contract.

5. This Contract shall commence on July 1, 2026, and shall expire on June 30, 2027 unless otherwise terminated earlier in accordance with the Contract Documents. SEPA reserves the right to extend the Contract upon written notice to Contractor, on the same terms and conditions, for an additional three (3) months for purposes of transitioning the supply of Products to another supplier. Upon satisfactory performance, and with mutual agreement between SEPA and Contractor, this contract may be extended for two additional years, in one-year increments. The extensions must be with the same conditions, specifications and discounts holding. Total possible length of this contract is three years.

6. The entire integrated agreement between SEPA and Contractor in connection with the Project includes this Contract Form, the completed Bid Form, SEPA's notice to Contractor of which Products Contractor has been awarded, any other completed forms required by the Specifications, and the Bid Documents, all of which are incorporated herein by reference.

IN WITNESS WHEREOF, the Contractor and SEPA cause this Contract to be signed, sealed and delivered as of the day and year first above written.

Contractor:

Signature

Brian Sullivan Account mngr.
Name and Title

Southeastern PA Buying Group:

Signature

Jessica R. Oldsey
Jessica Oldsey, Authorized Representative

UPPER DUBLIN SCHOOL DISTRICT

Andrew Lechman, Chief Financial Officer
1580 Fort Washington Avenue
Maple Glen, PA 19002
alechman@udsd.org
(215) 643-8811
www.udsd.org

December 16, 2025

Ms. Barbara Heller
US Foods
1200 Hoover Avenue
Allentown, PA 18109

Dear Ms. Heller,

We are pleased to inform you that on December 15, 2025, the Upper Dublin School District Board of Directors approved a one-year extension for the Food Products and Distribution Bid for the 2026-2027 school year in accordance with bid language.

Sincerely,

Andrew G. Lechman
AL/cm

INSPIRING LEARNERS EMPOWERING FUTURES

Contract Form

This Contract is made and entered into this 18 day of June, 2026 ("Effective Date") by and between the Southeastern PA Buying Group (hereinafter, "SEPA") and Rockland Bakery Inc. (the "Contractor").

Whereas, Contractor submitted a Bid in connection with SEPA's procurement of bread products (the "Products") as an indefinite quantity of goods and services contract as detailed in the Specifications incorporated in the Contract Documents;

Whereas, SEPA notified Contractor that it was the lowest responsive and responsible Bidder for some or all of the Products;

Whereas, Contractor executes this Contract Form to memorialize its acceptance of the terms and conditions of the Contract.

Now therefore, for the consideration stated herein and other good and valuable consideration, the sufficiency of which is expressly acknowledged by both parties, and intending to be legally bound hereby, the parties mutually agree as follows:

1. Capitalized terms not defined herein shall have the same means as set forth in the Instructions to Bidders or General Conditions of the Contract, as applicable.

2. Contractor agrees to furnish all Products requested by SEPA in writing in accordance with the Contract Documents.

3. Upon written request from SEPA, Contractor shall supply the Products to SEPA Members at the unit prices identified in Contractor's Bid Form within applicable time limits.

4. The quantities of Products listed in the Specifications and/or Bid Form are merely estimates of SEPA Member's needs. SEPA Members reserve the right to purchase more, less or none of the Products as each SEPA Member determines it requires in its sole and absolute discretion. The Products will be requisitioned by each SEPA Member on an as-needed basis throughout the duration of the Contract.

5. This Contract shall commence on July 1, 2026 and shall expire on June 30, 2027 unless otherwise terminated earlier in accordance with the Contract Documents. SEPA reserves the right to extend the Contract upon written notice to Contractor, on the same terms and conditions, for an additional three (3) months for purposes of transitioning the supply of Products to another supplier. Upon satisfactory performance, and with mutual agreement between SEPA and Contractor, this contract may be extended for four additional years, in one-year increments. The extensions must be with the same conditions, specifications and discounts holding. Total possible length of this contract is five years.

6. The entire integrated agreement between SEPA and Contractor in connection with the Project includes this Contract Form, the completed Bid Form, SEPA's notice to Contractor of which Products Contractor has been awarded, any other completed forms required by the Specifications, and the Bid Documents, all of which are incorporated herein by reference.

IN WITNESS WHEREOF, the Contractor and SEPA cause this Contract to be signed, sealed and delivered as of the day and year first above written.

Contractor:

Domenica Battaglia
Signature

Domenica Battaglia
Name and Title

office operations manager

Southeastern PA Buying Group:

Signature

Jessica Oldsey
Jessica Oldsey, Authorized Representative

PO Box 1637
Hockessin, DE 19707

Food Safety and Sanitation Proposal

Bensalem Township School District
Child Nutrition Services Department

PO Box 1637
Hockessin, DE 19707

Contents

Our company 2
Our Service 3
Material Specifications 4
Manual Cleaning 5
Mechanical Ware Washing 6
Proposal Locations 7
Program Cost 7
Agreement Period 8
Billing and Remittance 8
Contact 8
Appendix A: Schedule A 9
Appendix B: Schedule B 11

Our company

Food Safety Solutions, LLC, is a Food Safety Training & Education Company founded in 2001. It is the exclusive distributor of the SFSPac® Program in the Mid-Atlantic region. SFSPac® is PortionPac Chemical Corporation's food safety program that has specialized in serving the school nutrition industry since 1983. The Food Safety & Sanitation System has continued to evolve to help School Nutrition Directors meet the many changes they face when feeding young people over the past four decades. The education curriculum and training tools are based on industry "Best Practices" and adapted to meet the most current Model Food Code. The curriculum is also customized to meet the unique needs of your school district's State Codes and Department of Education guidance under USDA direction.

All Food Safety Solutions, LLC, Specialists are required to be certified as "ServSafe" instructors. All are FBI checked to meet stringent contractual requirements. Safe, attentive driving is confirmed annually as a requirement of employment for all of our Service Specialists.

Food Safety Solutions employees are in highly visible vehicles with the Company and Logo prominently displayed. Additionally, they will be attired in logo'd uniforms (purple shirts and khaki or black pants), have a photo ID and present themselves in a professional manner at all times on school properties.

PO Box 1637
Hockessin, DE 19707

Our Service

Each year prior to the beginning of school, Food Safety Solutions, LLC, assesses the District's goals and targets for food safety. A curriculum is developed to support that. A specific topic will be presented to the staff at the site level in the form of a "Calendar Education Module". The site-based modules are meant to reinforce subject matter that is introduced during the In-service sessions, manager training and staff development sessions. Education Modules are approved by the School Nutrition Association for Continuing Education Credits. These programs qualify for 2.5 hours of USDA Professional Standards required training annually.

Each site will be provided with laminated color-coded safety data sheets (SDS), mixing and use instructions, charts, bottles and all the ancillary supplies as required in this Bid. SDS are color-coded to the cleaning materials, posted in each kitchen and located in the Procedure & Reference Guide. Additionally, all SDS have a 24 hour Emergency Response Number and comply with OSHA Guidelines. Wall charts and instructional materials are color-coded to the cleaners and posted in each site. They include, but are not limited to the following:

- Sink Instruction Chart
- Sanitizer Test Strip Chart
- Hand Wash Chart
- Dish Machine Usage Chart
- Dish Machine Delimer Chart
- Floor Cleaning Chart
- Dining Room Table Cleaning Chart
- Color-coded Safety Data Sheets (SDS)

After the initial introduction phase (typically two to three months), sites will be visited seven times per year (as specified in Appendix A) for "Just-In-Time" (JIT) delivery of the color-coded detergents and supplies, site-based education, HACCP food safety verification and staff motivation and recognition. Should a site require inventory or technical needs in between scheduled visits, Food Safety Solutions Specialists will respond within 72 hours. Special trainings are a normal practice and can be requested by our field personnel, district supervisors and/or Kitchen Managers.

Additionally, each site will be provided with a Procedure & Reference Guide that will provide site managers with an education tool for new employee orientation and a reference for all employees for general kitchen practices, mixing and use instructions for the detergents, SDS, Sanitizer Logs and written cleaning procedures for equipment based on industry "Best

PO Box 1637
Hockessin, DE 19707

Practices". The guide also includes a complete scheduled task list and bi-lingual usage instructions. On-line instruction is also available free of charge and includes training on mixing and usage of the Cleaning Materials.

As a follow-up to the site visits, Food Safety Solutions, LLC, will send electronic service reports to document site-based education, service and inventory replacement. The proprietary software offers monthly verification of the USDA mandated HACCP system and provides critical due diligence documentation. Further, each sites monthly verification results are immediately available via email for administrative review. The detailed reports provide the district with an excellent management tool for work place and Food Safety Education. Year over year, food safety performance is tracked and targeted for measurable improvements with this information.

Prior to the end of each school year, Food Safety Solutions staff will conduct an Annual Review with the Child Nutrition Director and staff of their choosing to review program successes and discuss areas noted for improvement. This will also provide the opportunity to validate the districts HACCP Food Safety Plan and make any necessary changes.

Food Safety Solutions, LLC, will be the sole contractor for this proposal. The cleaning detergents are manufactured in the USA and the service will be administered by local Food Safety Specialists operating from a Delaware warehouse. Food Safety Solutions, LLC, is able and willing to provide a COI that states all insurance coverages.

Material Specifications

SFSPac® cleaning detergents were designed specifically for use in school food service operations and are packaged in **pre-measured portion controlled concentrated packages**. Each item arrives in a small box containing between 24 and 132 Pac® brand pouches. This provides for ease of storage and ample product inventory until our next service visit. Our products are used in thousands of school food service operations throughout the country.

SFSPac® detergent Pac® brand pouches and boxes are lightweight and designed with the cafeteria worker in mind. Our packaging was created to require only a small storage footprint that reduces the need for valuable shelf space, particularly in smaller kitchens. The cleaning material packages are easily opened with a Pac® Cutter or by using the convenient tear slot. Package labeling exhibits clear directions in English and Spanish.

All SFSPac® cleaning detergents utilize the **"Rule of One"** mixing concept: simply fill to the bottle's marked line and add the contents of one Pac® brand pouch. For ease of use and identification, each detergent has been color-coded to match its corresponding SDS, dispenser, instruction sheet, and packaging. Detergents dilute instantly in hot or cold water, make an effective cleaning solution which leaves no film or residue, and will not stain or discolor equipment when used at recommended proportions.

PO Box 1637
Hockessin, DE 19707

SFSPac® cleaning detergents conserve resources and energy throughout their life cycle. Our detergents have achieved, or are under review for, Green Seal™ certification where standards exist. All SFSPac® cleaning detergents meet or exceed the California Air Quality Control Board (CAB) Standard, and the SFSPac® Sanitizer and Germicidal Detergent used in our program are EPA-registered.

Furthermore, most SFSPac® cleaning detergents contain no volatile organic compounds (VOC), and, where indicated, have no hazards as defined by the OSHA Hazard Communication Standard, 29 CFR 1910.1200.

SFSPac® cleaning detergents are biodegradable, butyl free, acid free, and phosphate free. SFSPac® cleaning detergents contain no carcinogens, asthmagens or mutagens. All products are manufactured in the same facility in Chicago and utilize the same manufacturing standards as those products inspected and certified by Green Seal™. SFSPac® cleaning detergents use only food grade or natural dyes in compliance with Green Seal™ requirements.

Additionally, all SFSPac® cleaning detergent bottles exceed the Green Seal™ requirement that packaging is made from 25% post-consumer materials. SFSPac® bottles are made from 40% post-consumer content, which is the highest in the industry. SFSPac® proposes to provide the following cleaning detergents in quantities sufficient to maintain proper levels of sanitation as required by the school district and local Health Authorities. SFSPac® cleaners are safe for use around food service preparation, serving, storage and dining areas.

Manual Cleaning

All Purpose Cleaner (For floor cleaning and spray cleaning applications)

To be used with manual and/or machine cleaning methods. Low sudsing, easy to rinse detergent. Biodegradable. Phosphate free. Pleasantly scented. Requires potable water rinse if used on food preparation surfaces. Portion control package. Each package makes one quart spray bottle or 4 gallons of mopping solutions. **SFSPac5**.

Multi-Purpose Degreaser (For degreasing floors and spray applications)

To be used for heavy duty cleaning, degreasing of floors, food service equipment and other difficult to clean surfaces. Phosphate free. Portion control package. Each package makes one quart spray bottle or 4 gallons of mopping solutions. **SFSPac30.**

Pot and Pan Detergent

Concentrated liquid blend of high-foaming detergents, solvents and water conditioning agents. Biodegradable. Requires a potable water rinse following use on food preparation or serving surfaces. Portion control package. Each package makes one quart bottle of concentrate or 25 gallons in three-compartment sink. **SFSPac14 & SFSPac15**

PO Box 1637
Hockessin, DE 19707

Sanitizer

Concentrated liquid blend of quaternary ammonium compounds. EPA registered. Provides 200ppm active quaternary sanitizer. No potable water rinse required. Portion control package. Each package makes 64 quart spray bottles, 32 buckets for wiping cloths or 17 gallons in three- compartment sink. **SFSPac17.**

Germicidal Detergent (For cleaning and disinfecting) Neutral PH

Concentrated liquid quaternary ammonium compound provides a broad spectrum of effectiveness against a variety of gram-positive and gram-negative organisms including antibiotic resistant staphylococcus, HIV, HBV, COVID-19, and more. To clean all surfaces including those that are resilient removing odor forming bacteria and leaving no masking or cover up odor. Biodegradable. EPA registered. Portion control package. Each package makes 64 quart spray bottles or 16 gallons of cleaning and disinfecting solution. **SFSPac20N**

Mechanical Ware Washing

Service Specifications for Ware Washing System

Food Safety Solutions, LLC, proposes the following ware wash services as an integral part of the Food Safety and Sanitation System. The system will consist of, but not limited to, the following components:

- Just-In-Time (JIT) inventory will be provided at each site seven times per year.
- Service reports will be sent immediately following each visit to the Child Nutrition Director and designated staff members. Reports will include date, time spent at each site, a brief description of the training and services provided, and monthly Education Module that was presented during the visit.
- Instructional posters outlining proper handling of dish machine detergents & delimer chemicals will be placed in each facility.
- Color-Coded Safety Data Sheets will be provided, monitored, and updated at each site.
- Upon installation of the equipment all staff will receive in-service training on equipment, proper operation and maintenance of the dish machine. Site-based training will be performed on proper racking, de-liming, appropriate workflow, sanitary loading and unloading and maintenance checkpoints.
- State-of-Art Digital Dispensing allows for accurate and efficient chemical performance. All equipment is loaned at no charge to the district. We utilize DEMA electronic chemical dispensers for each dish-machine providing the Food Safety Solutions Specialist with digital readouts regarding the number of racks, de-liming cycles and proper chemical injection.

Ware Washing Detergent & Deliming Specifications

PO Box 1637
Hockessin, DE 19707

Food Safety Solutions, LLC, utilizes dish-machine detergents that were designed for use in Child Nutrition Operations that are dispensed from color-coded and number coded closed loop containers, specifically designed for use in our proprietary **My Terra Dish Machine Program**. The closed-loop system prevents employees from any contact with the chemicals. Chemicals are not released from the container until they are placed in the rack and snapped into place.

- **MyTerra Dish Machine Detergent:** Packaged in 1 Gallon Closed Loop Containers. Utilizing the latest advances in formulating technology, we have designed a product that can be used in high and low temperature applications as well as hard and soft water. Helps to minimize your delivery and inventory costs as well as storage space. Quickly emulsifies greasy soils for easy removal. Rinses quickly and easily from surfaces. The product is environmentally preferred as it does not contain Phosphates or NTA
- **MyTerra Dish Machine Rinse Aid:** Packaged in 1 Gallon Closed Loop Containers. Utilizing the latest advances in formulating technology, we have designed a product that can be used in high and low temperature applications as well as hard and soft water. Provides consistent, spot free drying. Rinses quickly and easily from surfaces.
- **MyTerra CombiLime:** Packaged in 1 Gallon Containers. A powerful, buffered liquid acid product designed for hard water precipitates that build up on kitchen equipment.
- **MyTerra Delimer:** Packaged in 1 Gallon Containers. A powerful, fast acting liquid acid product designed to rid the dish machine of scale and lime formations due to hard water precipitates. This balanced product works quickly to brighten internal surfaces and leave them sparkling. Contains special surfactants that degrease and clean internal surfaces of machine.

Other Items:

Food Safety Solutions, LLC, agrees to provide the items listed in this section; i.e., cleaning and sink gloves, scrapers, package cutters, sanitizer buckets, thermometer cups, goggles, sanitizer test kits and dispensing bottles and containers.

Proposal Locations

We will implement our Program in all Bensalem Township schools. Food Safety Solutions, LLC, is sensitive to school schedules and pressures in a kitchen environment.

Program Cost

The price shall be for delivery of the specified Sanitation System on a Per Site basis, billed monthly, or billed annually in July at a 1.5% discount. If the July invoice is not paid within 30 days of receipt, the price will revert to the undiscounted price. A site listing is in Schedule B.

PO Box 1637
Hockessin, DE 19707

	Monthly (7 visits)	Annual (7 visits)
Per school price	$220.07	$2,200.74
District total (9 schools)	$1,980.67	$19,806.70
	Pay in July 1.5% discount	$19,609.60

All materials, chemicals, accessories and instructional charts remain the property of FSS and will be removed if the program is cancelled.

Food Safety Solutions reserves the right to increase the price of the program by the Consumer Price Index.

Agreement Period

The contract period would be July 1, 2026, to June 30, 2029.

Either party may terminate the agreement at any time with 30 days notice.

Billing and Remittance

All billings will be from Food Safety Solutions, LLC, unless otherwise notified. Payment is preferred by ACH. ACH details are available upon request.

Contact

Benjamin Roderick

Email: ben@foodsafetysolutionsinc.com

Mobile Phone: 302-690-3160

Office Phone: 877-235-0177

Mailing Address:

Food Safety Solutions LLC

PO Box 1637

Hockessin, DE 19707

PO Box 1637
Hockessin, DE 19707

Appendix A: Schedule A

THIS SCHEDULE IS CONFIDENTIAL AND NOT SUBJECT TO DISCLOSURE UNDER: Pennsylvania – Pennsylvania's New Right to Know Law. Chapter 7; Sections 707. Production of certain records and Section 708 (b) (11) Exception for public records; exempt access to records which are "A record that constitutes or reveals a trade secret or confidential proprietary information."

SCHEDULE A

EDUCATION AND SERVICES

All services, materials, and consultation are included in the total cost provided under the Food Service Safety and Sanitation Service Agreement, offering complete budget control and predictability to the School District. Food Safety Solutions LLC ("FSS") will provide education & training, materials, services and inventory control and reports as follows.

I. Education

A. FSS's food safety and sanitation education program includes district in-service education, site-based education, and educational materials for the Participating Schools. The goal of the FSS education program is to provide education for the managers and employees of the School District and standardize sanitation and safety procedures in each Participating School's kitchen facility.

B. Education will be provided during each service cycle at each of the Participating Schools. Each educational session is approved for a minimum of .25 Continuing Education Credits (CEU) for School Nutrition Association (SNA) and/or a minimum of .25 CEU's towards USDA mandated Professional Standards Curriculum. The education provided will address each school's specific needs and will include on-going curriculum of sanitation and workplace topics.

II. Materials

A. Sufficient cleaning products, such as cleaners, detergents, cleaning and sink gloves, bottles, buckets, etc. and OSHA approved dispensing systems, including detergent, rinse agent, delimer and descale materials (if appropriate) will be provided and replenished as needed at each participating site.

B. SDS, posters and charts, procedure guide, and ancillary items (*e.g.,* pac cutters, sanitizer test strips, etc.) will be provided and replenished as

Food Safety SOLUTIONS INC

PO Box 1637
Hockessin, DE 19707

needed at each participating site.

C. Each of the participating schools is granted a non-exclusive license to use the program and the program materials. FSS will take steps to safeguard use of the program content by entities operating without an agreement from FSS or a related entity.

D. Provide chemical service application and delivery.

E. Provide log books as needed

F. Ensure all bottles, containers, and dispensing equipment is properly labeled and OSHA compliant

III. Service

A. The Specialists are certified in the administration, instruction, and recognition of HACCP program integrity and verification.

B. Food Safety Specialists will survey and audit each Participating School's kitchen, and provide immediate corrective action, staff training, action documentation, and supervisor notifications for follow-ups. The survey and audit are intended to measure due-diligence and verify system execution and staff motivation.

C. Vendor will provide service call times and dates upon request

IV. Reports / Review

A. FSS will provide documentation of the education received for School District due-diligence files.

B. All materials required for OSHA compliance will be placed in and kept current in each of the Participating Schools.

C. After completion of each survey and audit, FSS will generate a service report that documents program compliance and areas where further management action is required. These reports may serve as critical due-diligence confirmation and provide the School District with an electronic record of program compliance.

PO Box 1637
Hockessin, DE 19707

Appendix B: Schedule B

	Billing Start Month	Billing End Month
	Sept	June
	Site	**Price**
1	Belmont Hills Elementary School	$220.07
2	Benjamin Rush Elementary School	$220.07
3	Bensalem High School AB	$220.07
4	Cecelia Snyder Middle School	$220.07
5	Cornwells Elementary School	$220.07
6	Robert K Shafer Middle School	$220.07
7	Russell C Struble Elementary School	$220.07
8	Samuel K Faust Elementary School	$220.07
9	Valley Elementary School	$220.07
	Total Cost Per Month	$1,980.67
	2026-2027 Annual Cost	**$19,806.70**
	Pay-in-July Discount	$19,509.60

Quote Confirmation

BOB HOOD,

Thanks for choosing CDW. Review the details of Quote # 6B16MPY and complete your purchase.

COMPLETE PURCHASE

Quote #	Created	Account #	Quote Reference#
6B16MPY	09/03/2026	1954862	20260903

Pricing and Availability Notice -
Due to ongoing supply chain challenges, some hardware manufacturers cannot guarantee product availability or pricing until the product is shipped. While we make every effort to honor quoted pricing, if a hardware manufacturer increases its price to CDW after a quote is issued or order is accepted, we may need to update your quoted price to reflect that change irrespective of any timeframes or validity periods set forth in the quote, including up to the date of shipment. In the event of a price adjustment, we will notify you prior to shipment. Any price adjustment would only occur if the hardware manufacturer increases its pricing to CDW.

Product Details

	ITEM	PRICE	QTY	ITEM TOTAL
	ACROBAT SIGN SOLUTIONS BUSINESS MFG # 30001689CBT4A12R CDW # 8356195 Contract: Pennsylvania AEPA-026D K-12 (#026-D/A-0260-D1)	$1.14	11000	**$12,540.00**
			Subtotal	$12,540.00
			Shipping	$0.00
			Contract Fee	$0.00
			Recycle Fee	$0.00
			Product Total	**$12,540.00**

Delivery Details

Delivery Address
BENSALEM TOWNSHIP SCHOOL DST,
Robert Hood
3000 DONALLEN DR , Bensalem, PA 19020-1898

Delivery Method
Electronic Drop Ship

Billing Details

Billing Address
BENSALEM TOWNSHIP SCHOOL DST
ACCTS PAYABLE
3000 DONALLEN DR
Bensalem, PA 19020-1898
US

Payment Terms
NET 30 Days-Govt/Ed

Please remit payment to

CDW Government LLC
75 Remittance Dr Ste 1515
Chicago, IL 60675-1515

Need Help? Contact Your Account Manager
Raj Jhala
raj.jhala@cdw.com

Help Center

About Us | Privacy Policy
Copyright © 2007 - 2026 CDW. All Rights Reserved.

Terms and Conditions

This order is subject to CDW's Terms and Conditions of Sales and Service Projects found here.

Bensalem Township School District
3000 Donallen Drive
Bensalem, PA 19020

Contract Information Summary

1. **Counter Party to Contract/Agreement:** CDW-G/Adobe Inc.
2. **Person Recommending Approval:** Bob Hood - on behalf of SPED/Business Dept.
3. **Contract Amount** $12,540.00 - ($1.14 per Transaction x 11,000)
4. **Person Responsible for Administering Contract including maintaining current Clearances, current Certificates of Insurance, monitoring Autorenewal dates, payment approvals and all counter party responsibilities to the District:**
5. IT & SPED/Business
6. **District Contract Administrator** Bob Hood (Receives Renewals)
7. **Position with the District:** System Administrator
8. **Was the Contract reviewed by the District Solicitor? Yes or No.** No
9. **Start Date of the Agreement:** Oct. 1, 2026
10. **End Date of the Agreement:** Sept. 31, 2027
11. **Autorenewal, Yes or No:** No (New renewal quote received prior to renewal date)
12. **Number of Days' Notice to Terminate if Autorenewal:** 30 - (prior transaction history can be lost if not completed by renewal date)
13. **Funding (Account Code):** _____
14. **Board Approval Date:** _____

Any questions regarding this form, please contact the business office Purchasing Department. All forms must be submitted to Diane Litwin prior to Board approval.

Bensalem Township School District
3000 Donallen Drive
Bensalem, PA 19020

Contract Information Summary

1. **Counter Party to Contract/Agreement:** CDW-G/Adobe Inc.
2. **Person Recommending Approval:** Bob Hood - on behalf of SPED/Business Dept.
3. **Contract Amount** $12,540.00 - ($1.14 per Transaction x 11,000)
4. **Person Responsible for Administering Contract including maintaining current Clearances, current Certificates of Insurance, monitoring Autorenewal dates, payment approvals and all counter party responsibilities to the District:**
5. IT (Receives quote and manages licenses) For SPED/Business
6. **District Contract Administrator** Bob Hood (Receives Renewals)
7. **Position with the District:** System Administrator
8. **Was the Contract reviewed by the District Solicitor? Yes or No.** No
9. **Start Date of the Agreement:** Oct. 1, 2026
10. **End Date of the Agreement:** Sept. 31, 2027
11. **Autorenewal, Yes or No:** No (New renewal quote received prior to renewal date)
12. **Number of Days' Notice to Terminate if Autorenewal:** 30 - (prior transaction history can be lost if not completed by renewal date)
13. **Funding (Account Code):** _____
14. **Board Approval Date:** _____

Any questions regarding this form, please contact the business office Purchasing Department. All forms must be submitted to Diane Litwin prior to Board approval.

	A	B	C	D	E	F	G	H	I	J	K	L	M	N	O	P
1	School	Description	23-24	24-25	25-26	26-27	27-28	28-29	29-30	30-31	31-32	32-33	33-34			Completed Capital Reserve Funded
2	BHS	Carrier Unit, teacher's lunchroom			37,500											Completed Bond Funded
3	BHS	Mill & Repave Asphalt				310,000										To Be completed - Bond Funded
4	BHS	Mill & Repave Asphalt					410,000									Future Projects - Funding TBD
5	BHS	Replace Pool Scoreboard		62,118												
6	BHS	Repare Auditorium Stormpipe and Ceiling		23,000												
7	BHS	Renovate Generator		11,855												
8	BHS	Repair Pool Starting Blocks Timing System		10,467												
9	BHS	Repair Parking Lot Catch Basins		11,370												
10	BHS	Gym HVAC Replacement	3,542,000													
11	BHS	Façade & Column Project	2,483,687													
12	BHS	Sound System	69,332													
13	BHS	Auditorium AV System	38,054													
14	BHS	Baseball Backstop	22,000													
15	BHS	Doors & entrance, 2 new classrooms			52,068											
16	BHS	Geothermal repair			3,122,349											
17	BHS	Replace Hot Water Tanks			68,471											
18	BHS	Pool HVAC Repair			18,000											
19	BHS	Roof Replacement (north section)									4,000,000					
20	BHS	Roof Replacement (middle section)										3,750,000				
21	BHS	Roof Replacement (SW section)											3,225,000			
22	BHS	Baseball/Softball Scoreboards								100,000						
23	BHS	New Tennis/Pickleball Courts								2,500,000						
24	BHS	Synthetic Turf Field with Bleachers									5,000,000					
25	BHS	Wrestling Mats			29,400											
26	BHS	Choir Room Water infiltration remediation			13,770											
27	Faust	Roof Replacement							3,500,000							
28	Faust	Abandoned Oil Tank Investigation	11,000													
29	Faust	Complete abandoned oil tank project		13,396												
30	Faust	Demo old abandoned boiler		12,595												
31	Faust	HVAC Replacement Project		3,523,600												
32	Faust	Mill & Repave Asphalt			82,430											
33	Faust	Mill & Repave Asphalt				37,270										
34	Struble	Divider curtain, lunchroom/gym			25,587											
35	Struble	Mill & Repave Asphalt			192,840											
36	Struble	Mill & Repave Asphalt						49,480								
37	Snyder	Roof Replacement								3,750,000						
38	Snyder	HVAC Controls				62,150										
39	Rush	Roof extended warranty work				1,595,051										
40	Rush	Roof Repairs		80,530												
41	Rush	Boiler Replacement				491,441										
42	Rush	HVAC Replacement				8,855,300										
43	Valley	Mill & Repave Asphalt				225,000										
44	Valley	Rplace Kitchen watercooled condensers		51,257												
45	Valley	Exterior Masonry Repairs		78,240												
46	Valley	Replace Switchgear				400,000										
47	Valley	Replace Electric Distribution Panels				482,000										
48	Valley	New Carpet in Library				16,520										
49	Stadium	Replace Lights & Lightpole rehab	406,405													
50	Stadium	Replace Electric Distribution Panels				240,000										
51	Stadium	Replace Hot Water Heaters				102,133										
52	Stadium	Replace Air Handling Units				85,427										
53	Cornwells	Roof Replacement						1,900,000								
54	Cornwells	Repair exterior doors & windows							240,000							
55	Cornwells	Replace Classroom UV's/Radiant Heat						1,300,000								
56	Cornwells	Mill & Repave Asphalt					130,000									
57	Belmont	Heat Exchange Unit	88,656													
58	Belmont	Mill & Repave Asphalt					155,000									
59	Belmont	HVAC Replacement					3,000,000									
60	Belmont	Roof Replacement					1,900,000									
61	Belmont	Replace Electric Distribution Panels					476,000									
62	Belmont	Replace Switchgear					400,000									
63	DO	Roof Restoration					225,000									
64	DO	Replace Electric Distribution Panels					220,000									
65	DO	Chiller Replacement	228,900													
66	Districtwide	Security Cameras	280,000													
67	Districtwide	Investigation to Develop Roof Plan		25,900												
68	Districtwide	Asphalt Repair and Sealcoat		86,607												
69	Districtwide	Masonry repointing							450,000							
70	Total		7,170,034	3,990,935	3,642,415	12,902,292	6,916,000	3,249,480	4,190,000	6,350,000	9,000,000	3,750,000	3,225,000	64,386,156		
71																
72		**Total Bond Spend Target $23,066,469**														
73			23-24	24-25	25-26	26-27	27-28	28-29	29-30	30-31	31-32	32-33	33-34			
74		Completed Capital Reserve Funded	7,170,034	3,990,935	394,238	0								11,555,207		
75		Completed Bond Funded	0	0	3,234,407	0								3,234,407		
76		To Be Completed - Bond Funded	0	0	13,770	12,902,292	6,916,000							19,832,062	23,066,469	-40,938
77		Future Projects - Funding TBD	0	0	0	0		3,249,480	4,190,000	6,350,000	9,000,000	3,750,000	3,225,000	29,764,480		
78			7,170,034	3,990,935	3,642,415	12,902,292	6,916,000	0	0	0	0	0	0	64,386,156		

School	Description	23-24	24-25	25-26	26-27	27-28	28-29	29-30	30-31	31-32	32-33	33-34	
BHS	Carrier Unit, teacher's lunchroom			37,500									
BHS	Mill & Repave Asphalt						310,000						
BHS	Mill & Repave Asphalt							410,000					
BHS	Replace Pool Scoreboard		62,118										
BHS	Repare Auditorium Stormpipe and Ceiling		23,000										
BHS	Renovate Generator		11,855										
BHS	Repair Pool Starting Blocks Timing System		10,467										
BHS	Repair Parking Lot Catch Basins		11,370										
BHS	Gym HVAC Replacement	3,542,000											
BHS	Façade & Column Project	2,483,687											
BHS	Sound System	69,332											
BHS	Auditorium AV System	38,054											
BHS	Baseball Backstop	22,000											
BHS	Doors & entrance, 2 new classrooms			52,068									
BHS	Geothermal Repair			3,122,349									
BHS	Replace Hot Water Tanks			68,471									
BHS	Pool HVAC Repair			18,000									
BHS	Roof Replacement (north section)									4,000,000			
BHS	Roof Replacement (middle section)										3,750,000		
BHS	Roof Replacement (SW section)											3,225,000	
BHS	Baseball/Softball Scoreboards								100,000				
BHS	New Tennis/Pickleball Courts								2,500,000				
BHS	Synthetic Turf Field with Bleachers									5,000,000			
BHS	Wrestling Mats			29,400									
BHS	Choir Room Water infiltration remediation			13,770									
Faust	Roof Replacement							3,500,000					
Faust	Abandoned Oil Tank Investigation	11,000											
Faust	Complete abandoned oil tank project		13,396										
Faust	Demo old abandoned boiler		12,595										
Faust	HVAC Replacement Project		3,523,600										
Faust	Mill & Repave Asphalt			82,430									
Faust	Mill & Repave Asphalt				37,270								
Struble	Divider curtain, lunchroom/gym			25,587									
Struble	Mill & Repave Asphalt			192,840									
Struble	Mill & Repave Asphalt						49,480						
Snyder	Roof Replacement								3,750,000				
Snyder	HVAC Controls				62,150								
Rush	Roof extended warranty work				1,595,051								
Rush	Roof Repairs		80,530										
Rush	Boiler Replacement				491,441								
Rush	HVAC Replacement				8,855,300								
Valley	Mill & Repave Asphalt						225,000						
Valley	Rplace Kitchen watercooled condensers		51,257										
Valley	Exterior Masonry Repairs		78,240										
Valley	Replace Switchgear									400,000			
Valley	Replace Electric Distribution Panels				482,000								
Valley	New Carpet in Library				16,520								
Stadium	Replace Lights & Lightpole rehab	406,405											
Stadium	Replace Electric Distribution Panels				240,000								
Stadium	Replace Hot Water Heaters								102,133				
Stadium	Replace Air Handling Units								85,427				
Cornwells	Roof Replacement						1,900,000						
Cornwells	Repair exterior doors & windows							240,000					
Cornwells	Replace Classroom UV's/Radiant Heat						1,300,000						
Cornwells	Mill & Repave Asphalt							130,000					
Belmont	Heat Exchange Unit	88,656											
Belmont	Mill & Repave Asphalt							155,000					
Belmont	HVAC Replacement					3,000,000							
Belmont	Roof Replacement					1,900,000							
Belmont	Replace Electric Distribution Panels					476,000							
Belmont	Replace Switchgear									400,000			
DO	Roof Restoration								225,000				
DO	Replace Electric Distribution Panels								220,000				
DO	Chiller Replacement	228,900											
Districtwide	Security Cameras	280,000											
Districtwide	Investigation to Develop Roof Plan		25,900										
Districtwide	Asphalt Repair and Sealcoat		86,607										
Districtwide	Masonry repointing							450,000					
Total		7,170,034	3,990,935	3,642,415	11,779,732	5,376,000	3,784,480	4,885,000	6,982,560	9,800,000	3,750,000	3,225,000	64,386,156

Total Bond Spend Target $20,403,909

	23-24	24-25	25-26	26-27	27-28	28-29	29-30	30-31	31-32	32-33	33-34	
Completed Capital Reserve Funded	7,170,034	3,990,935	394,238	0								11,555,207
Completed Bond Funded	0	0	3,234,407	0								3,234,407
To Be Completed - Bond Funded	0	0	13,770	11,779,732	5,376,000							17,169,502
Future Projects - Funding TBD	0	0	0	0		3,784,480	4,885,000	6,982,560	9,800,000	3,750,000	3,225,000	32,427,040
	7,170,034	3,990,935	3,642,415	11,779,732	5,376,000	0	0	0	0	0	0	64,386,156

School	Description	23-24	24-25	25-26	26-27	27-28	28-29	29-30	30-31	31-32	32-33	33-34
BHS	Mill & Repave Asphalt				310,000		310,000					
BHS	Mill & Repave Asphalt					410,000		410,000				
BHS	Geothermal Repair			3,122,349								
BHS	Replace Hot Water Tanks			68,471								
BHS	Pool HVAC Repair			18,000								
BHS	Choir Room Water infiltration remediation			13,770								
Faust	Mill & Repave Asphalt				37,270							
Struble	Divider curtain, lunchroom/gym			25,587								
Snyder	HVAC Controls				62,150							
Rush	Roof extended warranty work				1,595,051							
Rush	Boiler Replacement				491,441							
Rush	HVAC Replacement				8,855,300							
Valley	Mill & Repave Asphalt				225,000		225,000					
Valley	Replace Switchgear				400,000					400,000		
Valley	Replace Electric Distribution Panels				482,000							
Valley	New Carpet in Library				16,520							
Stadium	Replace Electric Distribution Panels				240,000							
Stadium	Replace Hot Water Heaters				102,133				102,133			
Stadium	Replace Air Handling Units				85,427				85,427			
Cornwells	Mill & Repave Asphalt					130,000			130,000			
Belmont	Mill & Repave Asphalt					155,000			155,000			
Belmont	HVAC Replacement					3,000,000						
Belmont	Roof Replacement					1,900,000						
Belmont	Replace Electric Distribution Panels					476,000						
Belmont	Replace Switchgear					400,000				400,000		
DO	Roof Restoration					225,000			225,000			
DO	Replace Electric Distribution Panels					220,000			220,000			




TIC TAC TOE
ONE LINE PUZZLES
3-IN-A-ROW


ONE LINE PUZZLES
TRACE THE LINES BELOW WITHOUT
PICKING UP YOUR FINGER OR
TRACING THE SAME LINE TWICE


LABYRINTH

BENSALEM TOWNSHIP SCHOOL DISTRICT
Dorothy D Call Administrative Center 3000
Donallen Drive
Bensalem, PA 19020-1898
(215) 750 – 2800, Ext. 4211 Fax: (215) 359 - 0154
adalessandro@bensalemsd.org

NOTICE

REQUEST FOR QUOTE

The attached specification sheets are for Student Pictures, (Grades "K" thru "8"), for The Bensalem Township School District.

Quotations should be received in an email with a *subject line* marked **"K" thru "8" Photos** and sent to the following:

AJ Dalessandro, Purchasing Department
Bensalem Township School District
Dorothy D Call Administrative Center 3000
Donallen Drive
Bensalem, PA. 19020-1898
adalessandro@bensalemsd.org

Quotations must be received no later than 3:30 PM, on Wednesday, September 9, 2026.

BTSD reserves the right to reject any or all proposals and to waive any informality in any proposal.

This quotation will be for the 2026-2027 School Year and will include the option of renewals for the 2027-2028 and 2028-2029 School Years based on the performance in the first year.

AJ Dalessandro

Purchasing Department

SPECIFICATIONS
K thru 8 STUDENT PICTURES and I.D. BADGES
PHOTO/QUOTE

SECTION "A"

PART 1

The requested quotations will be for the following packages under the above heading in accordance with the following requirements. There are two groups with each having four package plans for choice.

GROUP 1: **KINDERGARTEN thru SIXTH - ELEMENTARY SCHOOLS**

Quotation prices on the following picture packets based and guaranteed on a "pre-pay" plan.

	2026/2027	2027/2028	2028/2029

PACKAGE 1-A
- 1- 8 x 10 Portrait
- 2- 5 x 7 Gift Size
- 4- 3 x 5 Desk Size
- 8- 2 x 3 Wallets
- 16- 1 x 2 Exchange
- 1- Class Composite

Price per individual packet: $_____ $_____ $_____

PACKAGE 1-B
- 1- 8 x 10 Portrait
- 2- 5 x 7 Gift Size
- 3- 3 x 5 Desk Size
- 8- 2 x 3 Wallets
- 8- 1 x 2 Exchange
- 1- Class Composite

Price per individual packet: $_____ $_____ $_____

PACKAGE 1-C
- 2- 5 x 7 Gift Size
- 2- 3 x 5 Desk Size
- 8- 2 x 3 Wallets
- 8- 1 x 2 Exchange
- 1- Class Composite

Price per individual packet: $_____ $_____ $_____

PACKAGE 1-D
- 1- 5 x 7 Gift Size
- 8- 2 x 3 Wallets
- 8- 1 x 2 Exchange
- 1- Class Composite

Price per individual packet: $_____ $_____ $_____

ALL PICTURES TO BE IN NATURAL COLOR, KODAK SILK FINISH or EQUAL.

GROUP 2: **SEVENTH thru EIGHTH - SECONDARY SCHOOLS**

Quotation prices on the following picture packets based and guaranteed on a "pre-pay" plan.

	2026/2027	2027/2028	2028/2029

PACKAGE 2-A

1- 8 x 10 Portrait
2- 5 x 7 Gift Size
4- 3 x 5 Desk Size
8- 2 x 3 Wallets
24- 1 x 2 Exchange
1- Grade Level Composite

Price per individual packet: $_____ $_____ $_____

PACKAGE 2-B

1- 8 x 10 Portrait
1- 5 x 7 Gift Size
2- 3 x 5 Desk Size
8- 2 x 3 Wallets
16- 1 x 2 Exchange
1- Grade Level Composite

Price per individual packet: $_____ $_____ $_____

PACKAGE 2-C

2- 5 x 7 Gift Size
2- 3 x 5 Desk Size
8- 2 x 3 Wallets
16- 1 x 2 Exchange
1- Grade Level Composite

Price per individual packet: $_____ $_____ $_____

PACKAGE 2-D

1- 5 x 7 Gift Size
16- 2 x 3 Wallets
16- 1 x 2 Exchange
1- Grade Level Composite

Price per individual packet: $_____ $_____ $_____

ALL PICTURES TO BE IN NATURAL COLOR, KODAK SILK FINISH or EQUAL.

Option to be made available for including in Group 1 and Group 2 packages:

1- 8 x 10 Portrait, Natural Color, Mounted $_____ $_____ $_____

All photographs in packages in both groups are to be in natural color and all prices must include taxes.

PART 2 cont.

1. **BLACK and WHITE PHOTO** – two (2) for each student, 2 ¼" x 1 ½" to be used for:
   a. Cumulative folder (sturdy stock)
   b. Packaged alphabetically by name, by grade, and homeroom for the yearbook.

2. **"K" thru "6"** A color class composite picture will be distributed to each student regardless of purchase.

3. **Middle School (only)** One (1) grade level composite (7 & 8) for each middle school principal.

PART 3 I. D. BADGES FOR GRADES "K through 8"

1. Each student shall be photographed to have an I.D. Badge made up. This portion of the quotation must be accomplished whether a student is purchasing any package in Parts 1 or 2. The I.D. Badges are to be carried by students each day while attending classes.
2. The I.D. Badges are to be hard-stock PVC stock material. **A bar code is required for these badges.** The information to accompany the photo on each badge will be developed from the Superintendent's office.
3. The cost of the I.D. badges will be deducted from the Administration Fees paid to School District, see Part 4, #'s 3 and 3a. The awardee will provide a complete listing to each school to be verified by the principal. Principals and vendor will jointly confirm results to the Superintendent when final agreement is reached.
4. Each principal and the awardee shall review listing of each student photographed to ensure each student's photograph has been taken.
5. Principals may contact awardee during the year to arrange to have a badge produced for all new students. The awardee agrees to arrange photo shoot and quick turnaround of 1-2 weeks required.
6. Principals may contact awardee during the year to arrange to have lost or stolen badges replaced. The awardee may apply a surcharge of 50% above stated quoted price for replacements.

	2026/2027	2027/2028	2028/2029
Pricing per I.D. Badge	$_____	$_____	$_____

PART 4 GENERAL QUOTATION AGREEMENT TERMS

1. The successful vendor will be awarded agreement for one (1), two (2), or three (3) School Years as approved by the Bensalem Township School District's Board of Directors. School Years 2026/2027, 2027/2028 and 2028/2029. The second and third year will be contingent on school principals' performance evaluation of the awarded vendor.
2. The quoted prices per package shall include all state and federal taxes.
3. The Administration Fee to the School District shall be 20% of gross sales after I.D. Badges and taxes. The information shall be sent directly to the Superintendent with information as spelled out in 3a.

3a. The successful vendor shall submit, BY SCHOOL, a full recap of how the commission was calculated based on gross sales after taxes. This recap should include students' names and dollar amount purchased.

4. The Vendor is required to provide an online ordering portal for parents and guardians to purchase student photographs and related products. The portal must be user-friendly, secure, and available throughout the duration of the contract.
5. The Vendor shall provide parents and legal guardians with an easy-to-reference schedule listing all student photography dates, times, and locations for the school year.
6. The Vendor shall be solely responsible for all order processing, payment collection, product distribution, and customer service. School personnel shall not be responsible for handling payments, processing orders, or resolving customer inquiries.
7. The students to be photographed are in kindergarten through eighth grade. The approximate number of ("k" through "8") students is 4500.
8. The Vendor shall demonstrate experience working with young children and students with disabilities.
9. The students, parents, or legal guardians are under no obligation to buy portraits, or other pictures from the successful vendor.
10. Reorders for additional pictures, and/or portraits by any student shall be handled directly between the parent/legal guardian and the successful vendor. School employees will have no involvement and responsibilities in this area.
11. School staff and faculty pictures are to be provided at no cost to the School District or individuals.
12. The successful vendor shall make the necessary number of trips to each school, scheduled at the convenience of each school with no added expense to the school; to provide full services described above.
13. The Vendor shall schedule and complete all student photography sessions to ensure delivery of photographs prior to Christmas. School Principals reserve the right to modify scheduled dates and times. Final products shall be delivered within **four (4) weeks** of each photography session.
14. A second visit is required to each school for the purpose of absentee coverage, plus whose picture(s) will be added to the class composite. The vendor shall provide ample notices for the students missing the initial photo shoot. The vendor is not obligated to provide an additional visit should a student miss both photo shoots.
15. Most schools have pictures taken without lunch interruptions, and the Vendor should bring sufficient staff to provide seamless continuation of picture taking.
16. The Vendor shall provide each Principal with electronic copies of student photographs for yearbook production. Files shall be organized and labeled with the student's name and corresponding classroom or teacher to facilitate yearbook preparation.
17. The Vendor shall provide the Superintendent's Office with electronic copies of all student photographs, including student names, grade levels, and classroom or teacher assignments, within **one (1) to two (2) weeks** of each photography session.
18. The successful vendor shall be responsible for and provide to each principal a concise crosscheck status report of student pictures returned against student pictures taken.
19. Principal composite books of classes should have appropriately sized photos done on a sturdy paper.
20. The Vendor shall provide advertising materials to each school two weeks prior to Picture Day(s) including posters to be displayed throughout the school.
21. Should the vendor desire to have combs for hair grooming it will be required a new comb be supplied for each student. No student shall be allowed to use a comb already used by another student.
22. The School District reserves the right to cancel the agreement in the event services are not satisfactory after the first year, see #1. Should this occur a new request for quotations would be drafted and issued.

23. **Barcode Testing Requirement:** Prior to scheduling student photography sessions, the Vendor shall provide sample I.D. badges and barcode samples for testing with the School District's existing software systems. Photography sessions shall not be scheduled until barcode compatibility is verified by the School District.
24. The Vendor shall provide all photos in JPEG format, appropriately named using the student or staff ID number (e.g., **1000001234.jpeg**), to facilitate upload into the District's internal systems.

Section "A" continued: **PHOTO/QUOTE**

CERTIFICATION OF SIGNATURE

This is to certify that the person signing and / or submitting the attached quote to the BENSALEM TOWNSHIP SCHOOL DISTRICT for:

_____
(Company Name)

is the OWNER_____/ OFFICER_____/ AUTHORIZED BIDDING AGENT_____
and is fully authorized to submit such quote on behalf of said company.

_____ (Company)	_____ (Date)
_____ (Address)	_____ (Phone w/area code)
_____ (Printed Full Name)	_____ (Fax w/area code)
_____ (Signature)	_____ (Title)
	_____ (Company Seal or Notary) or
_____ (Notary, if utilized)	_____ (Notary expiration date)

The above "Certification of Signature" must be executed, and must be returned with your quotation.

Student Pictures (Grades "K" thru "8")
With I.D. Badges _____

(Bid Identification)	**(Date of Quote Opening)**

Option information: E-Mail address _____

Web Site _____