Agenda of Regular Meeting

The Board of Trustees
San Elizario ISD

A Regular Meeting of the Board of Trustees of San Elizario ISD will be held in person on May 10, 2023, beginning at 5:30 PM SEISD Administration Office, 1050 Chicken Ranch Road, San Elizario, TX 79849.

Although one or more board members may participate by videoconference call, a quorum of the Board of Trustees will be physically present at this location for purposes of this meeting and in conformance with the Texas Open Meetings Act. All persons in physical attendance must comply with current state and local public health orders, including those regarding face masks/coverings, maintain at least 3 feet of social distance from one another, and remain in compliance with any other state and local public health orders issued in connection with the Covid-19 Pandemic. One or more of the vendors being considered at this meeting may appear through video conference call / Microsoft Teams / Zoom. Any such presentation will be visible and audible to anyone attending the open meeting.

Members of the public who desire to address the board regarding an item on this agenda must comply with the following registration procedures: Public comments may be submitted to acardonajr@seisd.net at any time prior to the board meeting time.

Public comment shall occur at the beginning of the meeting and shall follow all other requirements and limitations under SEISD Board Policy BED (Local).

The subjects to be discussed or considered or upon which any formal action may be taken are listed below. Items do not have to be taken in the order shown on this meeting notice. All items on the consent agenda shall be acted upon by one vote without separate discussion, unless a Board member requests that an item be withdrawn for individual consideration.

1. **GENERAL FUNCTIONS**
   Mrs. Sandra Licon, Board President
   A. Call Meeting to Order
   B. Roll Call
   C. Pledge of Allegiance
   D. **San Elizario ISD Mission Statement**
      San Elizario ISD's mission is to graduate students with skills to meet the demands of a changing world by promoting student success as non-negotiable, channeling resources to match learning needs of students, employ and retain a quality staff so that San Elizario is a proud, innovative and academically superior district.
      Mrs. Sandra Licon, Board President
2. **OPEN FORUM** (five-minute limit)
3. **DISTRICT RECOGNITIONS**
   A. Class of 2023 Graduating Migrant Student - Michelle Carbajal
      Ms. Beatriz Apodaca, Federal and Special Programs Coordinator
   B. 4th Chair ATSSB All - State Band Competition - Luciano Lopez

Mr. Kevin Elizalde, Band Teacher

C. Recognition of San Elizario High School Team Quest Winners
Ms. Lisa Renegar, Research and Evaluation Administrator

D. Recognition of Math Bee Winners
Ms. Debbie Cortez, Instructional Officer

E. Recognition of Career and Technology Education Students
Ms. Sandra Sanchez, CTE Coordinator
1. SEISD 2023 Cohort Emergency Medical Technicians
2. 2nd Place in State Competition - 2023 BPA Texas Fundamental Spreadsheet Applications and Top Ten at National Competition - Yvette De La Riva

F. Recognition of Student Athletes and Coaches
Mr. Edgar Ponce, Interim Athletic Director
1. Recognition of Athletic Trainer - Mr. Jesus Medina
2. Recognition of San Elizario High School Girls Varsity Soccer Team - Regional Quaterfinalists in UIL Soccer State Tournament
3. Recognition of San Elizario High School Boys Varsity Soccer Team - Final Four UIL Soccer State Tournament
4. TASCO- High School Boys Soccer 4A Head Coach of the Year - Coach Max Sappenfield
5. Recognition of San Elizario High School Varsity Tennis Team
6. Recognition of San Elizario High School Golf Team

G. Recognition of School Communicators - Mr. Horacio Hernandez and Ms. Perla Magallon
Dr. Jeannie Meza-Chavez, Superintendent

H. 2023 Charles Butt Foundation Raising School Leaders Finalist - Mrs. April Marioni, San Elizario High School Principal
Dr. Jeannie Meza-Chavez, Superintendent, and Dr. Rogelio Segovia, Associate Superintendent

I. Raise Your Hand Texas Trustee Advocates Program Graduation 6
Board of Trustees and Dr. Jeannie Meza-Chavez, Superintendent

4. **NEW BUSINESS / BOARD ACTION ITEMS**

A. P&I Co-Support Plan for 2023-2024 9
Dr. Jeannie Meza-Chavez, Superintendent, Dr. Rogelio Segovia, Associate Superintendent, Planning and Instruction Team, Campus Administration and Instructional Team
1. Co-Support Plan 2022-2023 Presentation 33
2. Establish date for Instructional Board Workshop
a. Monday, May 15, 2023 at 5:30 pm
b. Wednesday, May 17, 2023 at 5:30 pm

B. Discussion and possible action to nominate a Board of Trustee as a candidate to fill the Region 19 seat on the TASB Board of Directors 52
Board of Trustees

5. **CONSENT AGENDA** - Consider and possible Board action on

A. Financial Reports
Mr. Norberto Rivas, Chief Financial Officer
1. Tax Report 71
2. Financial Statements 73
3. Investment Report 79
4. Budget Amendment 91
5. Purchase Orders exceeding $25,000

a. PO# 45092 - Segovia's Produce - revising amount from $60,000.00 to $65,000.00 95
PO# 45093 - GH Dairy - revising amount from $150,000.00 to $155,000.00
PO# 45093 - Heist Disposal - revising amount from $34,830.00 to $37,430.00
PO# 45094 - Trejo Commercial Refrigeration - revising amount from $50,000.00 to $65,000.00
PO# 47996 - AREDI Enterprises - $42,262.25
PO# 47997 - City Fence & Pipe Co - $41956.80
PO# 47998 - City Fence & Pipe Co - $54,525.00
PO# 47999 - Frank's Supply Co Inc - $55,212.92

B. Consider and possible Board action to approve the Request for Proposals for Copiers, Duplicators, Equipment and Services (RFP# 23-113) and approval of PO# 47995 with the awarded vendor
Mr. Norberto Rivas, Chief Financial Officer

C. Consider and possible Board action to approve final payment to AREDi Enterprises LLC, for Loya Playground Area Site Improvements PO# 47396 116
Mr. Norberto Rivas, Chief Financial Officer

D. Consider and possible Board action to approve the first one-year extension with Aetna for Third Party Administration of Group Medical Health Benefits, Medical Provider Network, Pharmacy Benefit Management, Stop Loss Reinsurance, and COBRA Administration (RFP#20-1074) for the contract term of September 1, 2023 through August 31, 2024 118
Mr. Norberto Rivas, Chief Financial Officer

E. Consider and possible Board action to schedule special board meeting(s) for budget workshop #1 May 23, 2023 and for budget adoption on June 21, 2023 122
Mr. Norberto Rivas, Chief Financial Officer

F. Consider and possible Board action to approve the Changes to the 2023 - 2024 District Calendar 123
Ms. Lisa Renegar, Research and Evaluation Administrator

G. Pay Scale for Transition Specialist 126
Ms. Amanda Sanchez-Muñoz, Special Education Director

H. Consider and possible Board action to approve Goal Progress Monitoring
Ms. Lisa Renegar, Research and Evaluation Administrator
1. **GPM 2.2 -** 3rd Grade Reading Progress **127**
Ms. Lisa Renegar, Research and Evaluation Administrator
2. **GPM 2.3** - 8th Grade Reading Progress **130**
Ms. Lisa Renegar, Research and Evaluation Administrator
3. **GPM 2.4** - High School Reading (English I and II) **133**
Ms. Lisa Renegar, Research and Evaluation Administrator

I. Consider and possible Board action to approve the Monitoring Superintendent Constraints
Ms. Lisa Renegar, Research and Evaluation Administrator
1. **CPM 2.1** - Progress Monitoring - Principal Walkthrough Totals **136**
Ms. Lisa Renegar, Research and Evaluation Administrator
2. **CPM 2.2** - Assistant Principal Walkthrough Totals **138**
Ms. Lisa Renegar, Research and Evaluation Administrator

J. Consider and possible Board action to approve the Project BRAVO Memorandum of Understanding and Agreement 140

Dr. Rogelio Segovia, Associate Superintendent

K. Consider and possible Board action to approve the 2023 Summer School Schedule 146
Dr. Rogelio Segovia, Associate Superintendent, and Ms. Christine Jaksch, Director of Administrative Services

L. Consider and possible Board action to approve the Resolution in Support of School Communicators Day 149
Dr. Jeannie Meza-Chavez, Superintendent

M. Consider and possible Board action to approve the Resolution of the Board Regarding Policy FMH(LOCAL) - Student Commencement 150
Dr. Rogelio Segovia, Associate Superintendent

N. Consider disposal of surplus property declared obsolete and unnecessary by Superintendent or her Designee, to include disposal of broken furniture and technology equipment according to Administrative discretion and by any reasonable means.
1. Support Services Department 152
Jesus Martinez, Support Services Director

O. Consider approval of minutes for the following:
Board of Trustees
1. April 17, 2023 - Special Board Meeting 154

6. **PRESENTATION / REPORTS / INFORMATION**
A. Meal Service Update (Information) 167
Mrs. Agueda Reyes, Child Nutrition Services Director
B. At-a-Glance End of Year Campus Award Ceremony Schedule (Information) 168
Dr. Jeannie Meza-Chavez, Superintendent, and Dr. Rogelio Segovia, Associate Superintendent
C. Raise Your Hand Texas Session 6 - June 14, 2023 to June 16, 2023 (Information)

7. **EXECUTIVE SESSION**
The Board will enter into a closed meeting to discuss personnel matters, to consult with attorney, to discuss real estate matters, to consider recommendations for hiring of personnel or termination of personnel and other personnel matters under Sec. 551.071, 551.072 and 551.074, Texas Gov. Code:
A. Discussion on Employee / Board / Superintendent Communication

8. **THE BOARD WILL RETURN TO OPEN SESSION TO TAKE POSSIBLE ACTION ON THE MATTERS DISCUSSED IN EXECUTIVE SESSION**

9. **NEXT MEETING DATE:**
Special Board Meeting and Budget Workshop #1 May 23, 2023 at 5:30 p.m.
Regular Board Meeting: June 14, 2023, at 5:30 p.m.

10. **ADJOURNMENT**

If, during the course of the meeting covered by this Notice, the Board of Trustees should determine that a closed or executive meeting or session of the Board of Trustees is required, then such closed or executive meeting or session as authorized by the Texas Open Meetings Act, Texas Government Code Section 551.001 et seq., will be held by the School Board at the date, hours, and place given in this Notice or as soon after the commencement of the meeting covered by this Notice as the School Board may conveniently meet in such closed or executive meeting or session concerning any and all purposes permitted by the Act, including, but not limited to the following sections and purposes:

Texas Government Code Section:

551-071	Private consultation with the board's attorney.
551-072	Discussing purchases, exchange, leases, or value of real property.
551-073	Discussing negotiated contracts for prospective gifts or donations.
551-074	Discussing personnel or to hear complaints against personnel
551-076	Deliberation regarding security devices
551-082	Considering discipline of a public school child, or complaint or charge against personnel
551-083	Considering the standards, guidelines, terms or conditions the board will follow, or will instruct its representative to follow, in consultation with representatives of employee groups.
551-084	Excluding witnesses from a hearing.

Should any final action, decision, or final vote be required in the opinion of the school Board with regard to any matter considered in such closed or executive meeting or session, then the final action, or final vote shall be either:

(a) in the open meeting covered by the Notice upon the reconvening of the public meeting; or
(b) at a subsequent public meeting of the School Board upon notice thereof; as the School Board shall determine.

RAISE
YOUR HAND TEXAS

1005 Congress Ave, Suite 150
Austin, TX 78701
RaiseYourHandTexas.org

April 20, 2023

Dr. Jeannie Meza-Chavez
Superintendent
San Elizario ISD
1050 Chicken Ranch Road
San Elizario, TX 79849

Dear Dr. Meza-Chavez,

Congratulations on your school district's graduation from Raise Your Hand Texas' Trustee Advocates Program! We celebrate your success at finding, using, and amplifying your voice and the voices of your community to influence state education policy.

Raise Your Hand Texas is honored to recognize your school district's success with a Certificate of Achievement honoring San Elizario ISD. Please also accept these lapel pins bestowing the designation of Master Advocate to you and your school district's trustees. We also extend this honor to district staff who have consistently participated in this program.

Superintendent	Dr. Jeannie Meza-Chavez
Trustees	Sandra Licon
	Myrna Hernandez
	Lorenzo Luevano
	Axel Lopez
	Eduardo Chavez

Thank you for your commitment to all Texas school children and for advocating on their behalf. Congratulations! We look forward to collaborating on our shared advocacy journey together.

Very truly yours,

Missy Bender
Trustee in Residence

The State of Texas

R E S O L U T I O N

WHEREAS, The San Elizario Independent School District was among eight school districts from across the state that participated in the inaugural class of the Raise Your Hand Texas Trustee Advocates program; and

WHEREAS, An 18-month-long training series developed by the education advocacy nonprofit Raise Your Hand Texas, the Trustee Advocates program provides Texas school boards and superintendents with the tools they need to become more effective advocates for legislative policy that impacts public schools; during the program, participants learn how to build a local public education advocacy network with the purpose of encouraging community connectedness and supporting public education policy solutions at the state level; and

WHEREAS, In January 2022, Raise Your Hand Texas awarded grants for the program's inaugural fellowship cohort; the six-session program included an initial onsite training session for each participating school board and superintendent, followed by two-day sessions held in Austin for each superintendent and up to three school board members; and

WHEREAS, The perspectives provided by school district trustees and leaders are critically important to state policy makers, who share with them the responsibility of ensuring that Texas schools meet the needs and expectations of their communities, and all those who elected to participate in the Trustee Advocates program have set an admirable example through their dedication to this worthy goal; now, therefore, be it

RESOLVED, That San Elizario ISD be commended for its participation in the Raise Your Hand Texas Trustee Advocates program and that all those associated with the district be extended sincere best wishes for the future.

Kronda Thimesch

Kronda Thimesch
State Representative
District 65

RAISE®
YOUR HAND TEXAS

CERTIFICATE

OF ACHIEVEMENT

This certificate is awarded to

San Elizario ISD

As participants in the Raise Your Hand Texas Trustee Advocates Program, the Superintendent and Board of Trustees of San Elizario ISD are recognized for their outstanding achievement to build a local public education advocacy network that encourages community connectedness and influences state legislative outcomes.

RAISE YOUR HAND TEXAS® TRUSTEE ADVOCACY PROGRAM

4/20/2023
Date

Missy Bender
Missy Bender
Trustee in Residence

Michelle Smith
Michelle Smith, Ph.D.
Executive Director

San Elizario ISD
P.O. Box 920
San Elizario, TX 79849
Phone 915.872.3900
Fax 915.872.3903

MEMORANDUM

To: Members of the Board of Trustees
From: Dr. Rogelio Segovia; Planning & Instruction
Subject: P & I Co-Support Plan for 2023-2024
Date: May 10, 2023

HISTORY:

With the change to the 4-day instructional week for the 2023-2024 school year, the ways in which the Planning & Instruction (P & I) team supports our campuses will change. The Co-Support plan, developed with the expertise of the P & I team, describes the change from a "Push-In" model to a "Co-Support" model for services provided to all stakeholders. The Co-Support plan details the most effective methods for supporting teachers and students within the 4-day instructional model, which involves working alongside teachers and directly teaching students, while maintaining an increased presence at the campuses.

RATIONALE:

The district's A-F Accountability data and STAAR results for 2022 detail a need for support in varying areas. The entirety of the P & I team is involved in the Co-Support plan, as they work within their different areas of responsibility. The attached Co-Support plan details the framework of this model and describes the work that will take place during the 2023-2024 school year.

BUDGET:

There is no identified budgetary impact.

ADMINISTRATIVE RECOMMENDATION:

It is recommended to review the Co-Support Plan as presented.

Please check one: ☐ For approval ☒ Report / Information only ☐ Recognition only
☒ Attachment Included

San Elizario ISD
Co-Support Model Districtwide
2023 - 2024

“San Elizario ISD:
A Proud Community of Champions—Soaring to Excellence!”

San Elizario Independent School District
Planning & Instruction Co-Support Model Districtwide

On January 18, 2023, the Board of Trustees for the San Elizario Independent School District (SEISD) approved the 4-day week instructional calendar. The SEISD will operate on a 4-day per week calendar, which has most Mondays off, with students and staff in school Tuesdays through Fridays each week. This 4-day calendar model will help improve the recruiting and retention issue the district seeks to address by providing highly qualified teachers every day in every classroom for all students. Four solid days of instruction without long-term vacant positions will increase teacher efficacy and lesson delivery. Of equal importance is the mental health and stability of individuals in SEISD. Students and employees can utilize the Mindful Eagle Monday to practice self-care and be ready to have a solid week of focused learning and teaching.

The impetus to create a solid Co-Support model districtwide resulted from several factors. First, the district’s overall academic results for 2021-2022 indicated a significant need to improve student achievement. In addition, the expected time frame for the Texas Education Agency (TEA) to release official A-F Accountability ratings will be in September, much later than the beginning of the year for SEISD, scheduled to begin on July 25, 2023.

How will our support for schools look different with a 4-day instructional week?

The Planning and Instruction Department (P & I) developed a new Co-Support model to guide the instructional framework and direct Co-Support to teachers and students in the 4-day instructional week. A new component of this model will include direct Co-Support for teachers and students from the P & I staff, including program Administrators and Instructional Officers, as well as campus Instructional Specialists and other instructional staff already listed as support for classroom teachers.

Upon the approval of the 4-day instructional week, the review of many instructional-related systems began. The first was establishing what the traditional school day would look like for elementary and secondary students, which then helped determine what the school day would look like for teachers and other personnel throughout the district. Based on the 4-day framework, the bell schedules for elementary and secondary campuses are as follows for the 2023-2024 school year:

Elementary Bell Schedule: 7:20 AM–4:05 PM (525 instructional minutes)
Loya Primary School, Sambrano Elementary School, Alarcon Elementary School & Borrego Elementary School

Secondary Bell Schedule: 8:05 AM–4:50 PM (525 instructional minutes)
Ann M. Garcia-Enriquez Middle School & San Elizario High School

Instructional Leadership Planning Meetings

A significant part of the preparation for the 4-day instructional week has been a series of Instructional Leadership Planning Meetings. These meetings continue to be approximately once per week and involve the following roles: Superintendent, Associate Superintendent, Principals, Assistant Principals, Instructional Officers, Instructional Specialists, and P & I Administrators. Each meeting focuses on a specific topic, including these listed below:

- Bell Schedules
- Teacher Schedules
- PLC Purpose / Structure / Schedules
- Intervention Block Structure
- Instructional Resource Alignment and Usage
- Curriculum Scope and Sequence
- Professional Development (Districtwide & Campus)
- After School Enrichment Programs
- Tutoring: After School & Saturday

Pre-work for Curriculum Development and Instructional Pacing

In addition to the Instructional Leadership Planning Meetings, the topics below are areas of current work for 2023-2024 school year preparation:

- Strategically adjust scope and sequence to ensure coverage of all TEKS
- Instructional Officers black out dates to plan for 2023-2024 pacing - April 11-13, 2023
- Employ Year-at-a-Glance (TEKS Resource System tool to support districts in developing their local pacing calendars) in developing our pacing calendars for next year.
- Request time to meet with teachers in May via PLCs to show a preliminary draft and obtain their feedback regarding curriculum modifications needed to adjust to the 4-day workweek.

CO-SUPPORT PLAN (Plan is subject to adjustment based on student outcomes)

The Co-Support plan provides daily in-person support to teachers and students.

	Current Push-In Model	Co-Support Model
PLC	Facilitate PLCs and support the campus Instructional Specialists. Data to include unit assessments, MAP (K-12), IStation (PK-6), mCLASS (K-2), CIRCLE (PK4)	The instructional team will be newly trained in the Solution Tree PLC model. PLC schedule: Tue: Loya Wed: Alarcon Thu: Sambrano Fri: Borrego Secondary: Daily
Intervention	Assist with planning, resources, and lessons. Work directly with students (math, writing pullouts, TSIA2 reading) as needed and requested.	Work directly with students in the classroom during teacher intervention time. Based on the most recent data, teachers and IOs will be focusing on Tier 2 students. Campus interventionists will be focusing on Tier 3 students.
Learning Walks	Conduct learning walks and provide immediate feedback as needed.	IOs will support new teachers with less than two years of experience. ISs will support teachers with over two years of experience and long-term guest teachers. Learning walks will be purposeful and targeted to ensure appropriate instructional resources are being utilized. Focus will be on strengthening Tier 1 instruction. All P&I staff will support assigned campuses in addition to supporting the other campuses as needed.
Assessment Creation and Support	Create all unit assessments for all grades, all core content in both English and Spanish in K-5.	Through PLCs, teachers will participate in selecting content/questions for the transition to 4- and 8-week assessments. IOs will be responsible for formatting items in Eduphoria, so they meet the demands of STAAR 2.0. All P & I staff will support assessment monitoring and data disaggregation.

	Current Push-In Model	Co-Support Model
Professional Development	Create PD for district initiatives, content-specific ideas, STAAR 2.0; First-Year Teacher Academy (FYTA); Mentor Academy, any other support topic as requested by campuses (for example, formative assessments, vocabulary, word walls, etc.); IS academy at BOY; IS monthly meetings.	Create PD for district initiatives, content-specific ideas, STAAR 2.0; First-Year Teacher Academy (FYTA); Mentor Academy, any other support topics as requested by campus (for example, formative assessments, vocabulary, word walls, etc.); IS academy at BOY; IS monthly meetings and bite-sized PD for PLCs and after school.
Modeling	Strategies, lessons, routines, and best practices	Strategies, lessons, routines, and best practices to enhance both students' learning and teacher performance.
Lesson Development	Backward design, TEKS Resource System (TRS), Implementing TEKS RS (iTRS), use of adopted materials	Through PLC, teachers will plan with the backward design using the TEKS Resource System (TRS), Implementing TEKS RS (iTRS), and use of adopted materials, strategically (and continually) adjust scope and sequence to ensure that all TEKS are covered, creation of 4-day pacing calendars for all core-contents using Yag-o-matic (TRS tool)

CO-SUPPORT 9-WEEK CYCLE

The Co-Support model will include a 9-week cycle that includes direct teacher support via PLC planning and co-teaching/modeling plus ongoing direct student intervention by Planning and Instruction personnel.

Instructional Co-Support Team

Week	Level of Support	Responsible Personnel
Weeks 1 - 3	● PLC planning with teachers ● Conduct learning walks ● Model for teachers ● Plan for professional development ● Assessment creation and support (in Eduphoria)	● Instructional Officers ● Instructional Specialists ● P & I Team ● Principal ● Assistant Principal

Week	Level of Support	Responsible Personnel
Week 4	● Disaggregating data ● Preparation for PLC data talks ● Preparation for intervention and direct support	● Instructional Officers ● Instructional Specialists ● P & I team ● Principal ● Assistant Principal ● Librarian
Week 5	● Direct student intervention, continued	● Instructional Officers ● Instructional Specialists ● Campus Interventionist ● Principal ● Assistant Principal ● Librarian
Weeks 6 - 7	● PLC planning with teachers ● Conduct learning walks ● Model for teachers ● Plan for professional development ● Assessment creation and support (in Eduphoria)	● Instructional Officers ● Instructional Specialists ● P & I Team ● Principal ● Assistant Principal
Week 8	● Disaggregating data ● Preparation for PLC data talks ● Preparation for intervention and direct support to students	● Instructional Officers ● Instructional Specialists ● P & I team ● Principal ● Assistant Principal ● Librarian
Week 9	● Direct student intervention, continued	● Instructional Officers ● Instructional Specialists ● Campus Interventionist ● Principal ● Assistant Principal ● Librarian

CO-SUPPORT (P & I Administrators)

The Planning and Instruction administrators will directly support campus administrators in order to improve school productivity and increase student achievements.

Area/Topic	Level of Support	Responsible Personnel
Instructional Leadership	● Monitor alignment of curriculum ● Monitor and track scope and sequence ● Monitor data-driven instruction and assessment ● Monitor instructional interventions ● Monitor special populations	Dr. Jeannie Meza-Chavez, Superintendent Dr. Rogelio Segovia, Associate Superintendent

Area/Topic	Level of Support	Responsible Personnel
Human Capital	● Monitor teacher feedback and coaching ● Monitor quality of informal walkthroughs and formal observations	Dr. Jeannie Meza-Chavez, Superintendent Dr. Rogelio Segovia, Associate Superintendent
School Culture	● Monitor expectations ● Monitor discipline	Dr. Jeannie Meza-Chavez, Superintendent Dr. Rogelio Segovia, Associate Superintendent
Strategic Operations	● Monitor instructional schedules ● Monitor usage of instructional materials	Dr. Jeannie Meza-Chavez, Superintendent Dr. Rogelio Segovia, Associate Superintendent
STAAR Testing TELPAS Testing	● Campus leadership training ● Campus TA training is provided for CTC's ● Test monitoring during active testing ● Consistent support for each campus by phone, text, email, TEAMS, campus visits, etc. ● Assistance with score reporting and data disaggregation	Ms. Lisa Renegar, Research and Evaluation Administrator
TSIA Testing MAP Testing	● Data disaggregation to determine intervention groups and/or re-testing ● Assistance with vouchers, proctor training, staff training, session creation, and score reporting ● Testing monitoring during active testing	Ms. Lisa Renegar, Research and Evaluation Administrator
College, Career, and Military Readiness (CCMR)	● Uploads of all CCMR-related assessment scores ● Spreadsheets of all 9-12 students to show CCMR status provided at least monthly to the SEHS team. ● Determination of intervention groups to assist in CCMR point increases ● Training and support on the CCMR process as related to accountability	Ms. Lisa Renegar, Research and Evaluation Administrator
Gifted and Talented (GT)	● Support for pullout lesson design ● Monitoring of GT pullout lesson delivery ● Continual support for the GT annual identification process	Ms. Lisa Renegar, Research and Evaluation Administrator

Area/Topic	Level of Support	Responsible Personnel
Career and Technical Education (CTE)	● Monitor TEA-approved changes with Programs of Study (POS) and Industry Based Certifications (IBC) ● Support and schedule appropriate industry professional development for CTE teachers POS ● Support in increasing internships for SEHS with local industry companies ● Support POS with new equipment and new software ● Provide POS course sequence to campus administration and counselors to support student endorsement and scheduling ● Assist with the proctoring of CTE certification exams ● Inform, support and provide guidance to the counselors on CTE TEA updates and changes ● Support, guidance and training for CTE teachers on TEA-approved certifications ● Support and provide administration and counselors with CTE training	Ms. Sandra Sanchez, CTE Administrator
CTE Support for CCMR	● Provide information, assist and guide counselor on SEECHS crosswalk for new junior and upcoming senior EPCC courses that will be taken ● Provide advance CTE training to counselors to support CTE counseling in the areas of endorsements, POS, IBC, and scheduling of the students to become completers for accountability ● Provide calendar of scheduled CTE exams to track certifications for accountability ● Support SEHS campus by entering POS certifications received into TEAMS and Performance Acknowledgements by student for accountability ● Provide quarterly reports on CTE IBCs ● Training and support on the CCMR process for accountability	Ms. Sandra Sanchez, CTE Administrator

Area/Topic	Level of Support	Responsible Personnel
Emergent Bilingual Support	● Provide LPAC training to serve our EB population in the appropriate setting ● Continual support for the EB identification process ● Support EB lesson design ● Monitor EB lesson delivery ● Ensure EB support is effective in achieving objectives ● Direct support for EB teachers/students ● TELPAS practice and testing support ● Ensure regulations concerning EBs are observed	Ms. Susana Frescas, Instructional Programs Administrator
Other Supports	● Monitor instructional strategies ● Provide support in curriculum design and implementation of practices supported through research and aligned with district goals ● Provide guidance to instructional programs and staff ● Assist with data disaggregation to determine intervention groups and/or re-testing ● Assist with MAP testing platform ● Testing assistance with MAP/TELPAS ● Monitor continual support for teachers in need of assistance ● Monitor continual support to first/second year teachers ● Direct campus support at assigned campus(es)	Ms. Susana Frescas, Instructional Programs Administrator

INTERVENTION

- Systematic Student Intervention Process based on 4- and 8-week assessments
- Instructional Officers, Instructional Specialists, campus interventionists, and classroom teachers will be responsible for providing interventions
- Instructional Officers and Interventionists will attend Lead4ward's Intentional Intervention session to align practices and resources
- Parameters and responsible parties for each tier
    - First Teach: Classroom Teacher
    - Tier I: Classroom Teacher (all students)
    - Tier II: Parameter of 41-55%; teachers, IOs, and ISs remediate students who fall in this category per assessment. IO & IS intervention support will occur at the campus after administered assessments during weeks 5 and 9.

- Tier III: Parameter of 0-40%; campus interventionists remediate students who fall in this category per assessment. Interventions will occur at the campus after administering assessments during weeks 5 and 9.

DATA POINTS	Current Push-In Model (District-Mandated)	Co-Support Model (District-Mandated)
***MAP Assessments for all Kindergarten-12th grade students for Reading and Mathematics (Beginning-of-Year (BOY), Middle-of-Year (MOY), End-of-Year(EOY))**		
PK-4	● CIRCLE (BOY, MOY, EOY) ● IStation Reading & Math (monthly)	● CIRCLE (BOY, MOY, EOY)
K-2	● mCLASS Reading (BOY, MOY, EOY) ● IStation Reading & Math (monthly) ● TRS Unit Assessments Reading (2nd grade-second semester only) ● K-1 STEMscopes Math Unit Assessments ● 2nd Grade Sharon Wells weekly and six weeks assessments	● mCLASS Reading K-2 (BOY, MOY, EOY) ● DRA/EDL Kinder- MOY, EOY only) ● DRA/EDL Grades 1-2 BOY, MOY, EOY) ● K-1 STEMscopes Math Unit Assessments ● 3 & 6 weeks Sharon Wells Math Assessments for grade 2
3-6	● TRS Unit Reading Assessments ● IStation (monthly) ● Sharon Wells weekly and six weeks assessments for grades 3-5 ● TRS Unit Assessments for grade 6 Math	● 4 & 8 week Reading Assessments ● 4 & 8 week Math Assessments for grade 6 ● 3 & 6 week Sharon Wells Math Assessments for grades 3-5
7-8	● 4 & 8-week Assessments	● 4 & 8 weeks Math & Reading Assessments
9-12	● TRS Unit Assessments (RLA/SS) ● 4 & 8-week Assessments (Math & Science)	● 4 & 8 week Math & Reading Assessments

INSTRUCTIONAL RESOURCES

Loya Primary	Core Instructional Materials	Supplemental Instructional Materials	Intervention Instructional Materials
Reading	PK-3: Frog Street PK-4: Scholastic PK On My Way	Manipulatives used in the literacy centers according to the content and theme	Tier II IStation PK-4 STAR-fall Tier III Journeys PK-4
Writing	PK-3: Frog Street PK-4: Scholastic PK On My Way	Handwriting without Tears Writing center in literacy stations using markers, crayons, letter cutouts, etc.	Handwriting without Tears – Penmanship Component
Mathematics	PK-3: Frog Street PK-4: Scholastic PK On My Way	Manipulatives used in the literacy centers according to the content and theme.	Tier II IStation PK-4 STAR-fall
Science	PK-3: Frog Street PK-4: Scholastic PK On My Way	Manipulatives used in the literacy stations according to the content and theme. Online video resources. Makerspace lab: Lessons are connected with theme according to what is being taught in the classroom (alignment)	
Social Studies	PK-3: Frog Street PK-4: Scholastic PK On My Way	Manipulatives used in the literacy stations according to the content and theme. Online video resources. Makerspace lab: Lessons are connected with theme according to what is being taught in the classroom (alignment)	

Loya Primary	Core Instructional Materials	Supplemental Instructional Materials	Intervention Instructional Materials
Phonics	PK-3: Fundations and Estrellitas PK-4: Fundations and Estrellitas	Learning dynamics online videos sources	STAR-fall

Sambrano Elementary	Core Instructional Materials	Supplemental Instructional Materials	Intervention Instructional Materials
Reading	HMH	Foundations K-2 Estrellita K-1 Lunita 2	Reading A-Z Guided Reading
Writing	HMH	Foundations K-2 Estrellita K-1 Lunita 2	Writable Writing AZ
Mathematics	Sharon Wells	STEMscopes	MAP Practice Component
Science	Stemscopes	STEMscopes	STEMscopes
Social Studies	My World-Saavas		

Alarcon Elementary Borrego Elementary	Core Instructional Materials	Supplemental Instructional Materials	Intervention Instructional Materials
Reading	HMH	iReady	IStation Benchmark Education
Writing	HMH	Forde Ferrier	Writable Writing A-Z
Mathematics	Sharon Wells	Go Math	iXL & STEMscopes
Science	STEMscopes	Forde Ferrier	iXL
Social Studies	My World-Saavas	Reading AZ	Targeted with Reading Intervention

Middle School	Core Instructional Materials	Supplemental Instructional Materials	Intervention Instructional Materials
Reading	My Perspective Reading-Saavas 6-8	iReady	iXL
Writing	NoRedInk	iReady	Journey
Mathematics	McGraw-Hill 6-8	iReady	iXL Math Zinger
Science	Glencoe Science 6-8	iXL	Science Zinger
Social Studies	HMH-Contemporary World Studies 6 HMH Texas History 7 HMH U.S. History-Reconstruction 8	Lowman	iXL

High School	Core Instructional Materials	Supplemental Instructional Materials	Intervention Instructional Materials
Reading Language Arts	My Perspective Reading 9-12 Savvas	iXL Sirius Newsela	Edgenuity
Writing	My Perspective Reading 9-12 Savvas	iXL MarcoLearning*	Edgenuity
Mathematics	Algebra I Savvas Algebra II Savvas Geometry Savvas	iXL	Edgenuity

High School	Core Instructional Materials	Supplemental Instructional Materials	Intervention Instructional Materials
	Pre-Calculus Savvas		
Science	Biology HMH (HS) STEMscopes Chemistry McGraw-Hill (HS) Physics McGraw-Hill HMH (HS) STEMscopes Aquatic Science TX Aquatic Science (HS) Astronomy (HS)	iXL	Edgenuity
Social Studies	HMH all Social Studies 9-12	iXL	Edgenuity

ACCOUNTABILITY

Accountability Ratings–2022

In the A-F accountability system in 2022, San Elizario ISD scored an overall 87 B. Our district made significant gains in academic growth as we worked diligently to fill COVID learning gaps. The table below represents SEISD as a whole.

	Component Score	Scaled Score	Rating
Overall		**87**	**B**
Student Achievement		**73**	**C**
STAAR Performance	36	62	
College, Career and Military Readiness	59	89	
Graduation Rate	91.4	65	
School Progress		**92**	**A**
Academic Growth	80	92	A
Relative Performance (Eco Dis: 90.9%)	48	86	B
Closing the Gaps	**45**	**75**	**C**

As a district, areas of concern included “Closing the Gaps” and overall “Student Achievement.” Closing the gaps refers to our subpopulations, such as emergent bilingual and Special Education students, having equal opportunities to achieve compared to the “all-student” population. Student achievement refers to our students’ overall performance on STAAR assessments.

Regarding campus accountability ratings for 2022, Loya Primary and Sambrano Elementary scored an 87 B to mirror the district’s ratings.

These campuses are paired with the district and do not take the STAAR test.

Alarcon Elementary earned an 86 B in 2022. Their area of strength was in academic growth. Overall student achievement earned a scaled score of 64, which is not rated with a letter grade as per Senate Bill 1365.

	Component Score	Scaled Score	Rating
Overall		**86**	**B**
Student Achievement		**64**	**Not Rated: Senate Bill 1365**
STAAR Performance	37	64	
College, Career and Military Readiness			
Graduation Rate			
School Progress		**92**	**A**
Academic Growth	85	92	A
Relative Performance (Eco Dis: 93.4%)	37	70	C
Closing the Gaps	**56**	**72**	**C**

Areas of work for both the district as a whole, and Alarcon Elementary School, include closing the gaps and overall academic achievement. Our P & I team has focused on these areas during the 2022-2023 school year, focusing on planning rigorous, TEKS-aligned lessons with a strong first teach.

Borrego Elementary earned an 87 B for 2022. Overall student achievement was below 70, resulting in the letter grade not being published. Closing the gaps was a challenge, mirroring the results seen from other campuses. Academic growth showed to be Borrego’s strength, aligning with the other campuses’ performance.

	Component Score	Scaled Score	Rating
Overall		**87**	**B**
Student Achievement		**65**	**Not Rated: Senate Bill 1365**
STAAR Performance	38	65	
College, Career and Military Readiness			
Graduation Rate			
School Progress		**91**	**A**
Academic Growth	83	91	A
Relative Performance (Eco Dis: 90.9%)	38	72	C
Closing the Gaps	**73**	**76**	**C**

GEMS scored an overall 85 B in 2022. Student achievement was also below 70, resulting in the letter grade not being published. GEMS' area of strength was academic growth, with students making dramatic gains from 2021. Closing the gaps was also challenging, with EB and SPED students performing below the "All Students" groups in most areas.

	Component Score	Scaled Score	Rating
Overall		**85**	**B**
Student Achievement		**69**	**Not Rated: Senate Bill 1365**
STAAR Performance	37	69	
College, Career and Military Readiness			
Graduation Rate			
School Progress		**88**	**B**
Academic Growth	78	88	B
Relative Performance (Eco Dis: 91.7%)	37	80	B
Closing the Gaps	**58**	**77**	**C**

San Elizario High School earned an overall 78 C for 2022.

	Component Score	Scaled Score	Rating
Overall		**78**	**C**
Student Achievement		**72**	**C**
STAAR Performance	33	58	
College, Career and Military Readiness	59	89	
Graduation Rate	91.4	65	
School Progress		**81**	**B**
Academic Growth	70	80	B
Relative Performance (Eco Dis: 90.2%)	46	81	B
Closing the Gaps	**33**	**71**	**C**

With the A-F calculations for a high school being different from elementary and middle school campuses, SEHS did not have academic growth carry the bulk of the campus ratings. Relative performance was higher, indicating that SEHS performed better than other schools with similar demographics throughout the state.

Overall, two areas of concern are based on the 2022 A-F ratings. Closing the gaps and overall student achievement are the areas of focus leading into the 2022-2023 school year and beyond. With gaps still to fill from the COVID years, academic growth will still be the driving factor for the foreseeable future. The P & I team considers the A-F ratings and their implications as they develop services targeted for each campus.

The A-F Accountability system is undergoing a 'refresh' at the current time. The refreshed design is approaching completion. Due to these changes, the A-F ratings for 2023 will be late this year and not expected until September 2023. An exact date has not yet been set.

STAAR/EOC Scores–2022

The overall accountability ratings show a need to increase the STAAR performance to impact Domain I, Student Achievement. Although the A-F rating tables show overall percentages, our P & I team drills those percentages down to the individual student's level and drills each test down to the level of the TEKS' student expectations. During PLC meetings and training sessions, the data is examined with teachers to determine the best way to intervene with each of their students. The intervention block can then be used to address the identified needs with targeted lessons and activities.

Our most meaningful comparison of STAAR strengths and areas for improvement comes from looking at 2019 vs. 2022 scores (See Addendum 1). The year 2019 was the last regular, pre-pandemic set of STAAR results. The P & I team analyzed the STAAR score changes based on results in 2019, 2021, and 2022 to look for themes and identify areas for support. The overall themes showed strong scores in 2019 with a significant decrease in 2021. Math scores were lower than reading overall due to the unavailability of math manipulatives during home-based learning. These results, and the drive to return to and exceed 2019 score levels, is the impetus for the Co-Support plan created by the P & I team. The preliminary STAAR results which list scale scores and performance levels will be released on 6/27/2023.

The breakdown of STAAR findings by grade level is as follows:

3rd Grade
Third grade math and reading scores have rebounded approximately half of the pandemic-related learning loss. Math scores are lower than reading, requiring our math teachers to provide hands-on instruction involving math manipulatives. We aim to bring our math and reading scores in 3rd grade back to 2019 levels, especially at the approaches level. We need to gain 26% at approaches for math and 20% at the approaches level for reading in 3rd grade. The P & I team is working closely with 3rd grade teachers to stay on track with Sharon Wells math curriculum.

4th Grade
STAAR trends in 4th grade show lower scores in math than reading, following the overall theme. The performance in comparison to 3rd grade is significantly higher, however. Fourth-grade math needs a

9% gain to return to the 2019 approaches level. In 4th grade reading, only a 5% gain in reading is required to get back to the 2019 approaches level. These scores show a disparity between elementary campuses in that Alarcon is significantly lower than Borrego. The P & I team is aware of this difference and is working closely with Alarcon's 4th-grade team to address this disparity. This is taking place via PLC planning, learning walks with feedback, and direct teacher and student intervention with targeted lessons.

5th Grade

Fifth grade math follows the overall trend of making up over half of the pandemic learning loss. There is alignment between Alarcon and Borrego in terms of trends. Fifth grade reading shows tremendous gains from 2021, with only 7% needed at the approaches level to return to 2019 levels. Alarcon Elementary School's 5th grade reading teachers made excellent progress, and their lesson delivery serves as a model for the grade levels who made lesser gains. Fifth grade science shows a disparity, with Alarcon's scores lower than Borrego's. This finding causes our P & I team to work more closely on lesson design with the Alarcon 5th grade science teachers.

6th Grade

Sixth grade needs to gain 21% in math to return to the pre-pandemic approaches level. Therefore, sixth grade math is an area to address. The gaps in reading are fewer, and strong lesson development will keep filling learning gaps. The P & I team is collaborating with the 6th grade teachers for intervention planning and strong lesson delivery. Instructional officers will intervene directly with students by teaching Tier 2 student groups.

7th Grade

Seventh grade reading has almost rebounded completely from pandemic-related learning loss. Math is on the upswing, with larger gaps to fill, but they are halfway there. The work will continue in math and reading at 7th grade. The IO's and IS's are working closely with the GEMS' reading and math teachers during PLC's to improve lesson delivery via the backwards design approach.

8th Grade

Eighth grade has made the greatest gains in reading. In math, science, and social studies, the theme of a large drop in 2021, followed by a large gain in 2022, was also seen. P & I will continue our work with the 8th-grade teachers, the goal being quality first-teach lessons that will bring our students back to 2019 pre-pandemic score levels. Direct student intervention will occur as small Tier 2 groups are taught directly by IO's, using data-driven lessons.

English I/II

English I and II scores are usually slow to change, as an overall theme throughout the state. Our SEHS students must gain 19% in English I and 17% in English II to resume pre-pandemic score levels at approaches. Making gains of this magnitude in English I and II will take time. Our most

significant area of support is to mentor and train our newer English teachers. Staff turnover in high school ELAR has been an issue. With the switch to a 4-day week, the hope is to fill these positions with experienced teachers who will commit to staying in SEISD. P & I will focus on training ELAR teachers in lesson delivery via backward-designed, rigorous first-teach lessons. There will be direct intervention with students, as IO's conduct instruction with Tier 2 student groups.

Algebra I

Algebra I struggled due to the pandemic learning loss. Our ISs and IOs are working with the SEHS Algebra I teachers to develop backward-design lessons. A gain of 43% is needed to raise Algebra I back to the pre-pandemic approaches level. Tier 2 student groups will be taught directly by IO's leading up the STAAR Algebra I test administration.

Biology

High school science struggled due to staffing shortages. There were several long-term guest teachers in the high school science department and inexperienced biology teachers. Our IOs and ISs have worked diligently with the science department on lesson design, lab design, and backward design planning. Recruitment of high school science teachers for the 2023-2024 year is an ongoing process. The P & I team will intervene with Tier 2 groups via direct student instruction as preparation for Biology EOC testing.

U.S. History

U.S. History scores have come close to reaching pre-pandemic levels. With our students increasing their reading achievement so dramatically, improved reading abilities translate into improved U.S. History scores. We anticipate that 2022 scores in U.S. History will rebound to 2019 levels with the direct intervention by the P & I team that impacts the quality of instructional delivery. Students will also benefit from direct instruction by the IO's.

Support for Curriculum Development and Instructional Pacing

- Strategically adjust and format detailed pacing calendars (all content areas and all grade levels) to meet the all-encompassing demands of a 4-day school week.

Support for Professional Learning Communities based on the Solution Tree model:

- **Build** a collaborative culture committed to collective inquiry and continuous improvement by meeting with teachers regularly.
- **Lead** all teachers to high levels of achievement by working in teams, not in isolation, to effectively plan and develop explicit Tier 1 (First-teach) lessons by maximizing class time with bell-to-bell instruction.
- **Develop** and implement district summative assessments to meet the demands of STAAR 2.0 and the new item types to create a shared understanding of assessments.

- **Analyze** evidence of student learning and use that data to respond to students' individual needs by sharing strong lesson practices.
- **Construct** a systematic process to provide additional time and support for students experiencing difficulty and ensure every student has a clear path to deeper understanding.

Co-Support: In-Classroom Collaboration

- Provide direct support to teachers through
    - focused learning walks with immediate feedback and collaborate on the next steps for continued improvement.
    - feedback and support to teachers based on Instructional Rounds observations with debriefing.
    - address all needs for support with immediacy for teacher requests

Co-Support: New Teacher Development and Growth

- Plan and deliver first-year teacher support to help grow effective teachers through ongoing learning throughout the school year.
- Plan and deliver co-support to empower mentor teachers to lead mentees to first-year success.

Co-Support: Effective STAAR Test Preparation

- Customize and deliver a strategic 10-day STAAR review for all tested grade levels and content areas to teachers.
- Provide side-by-side guidance on research-based instructional materials that provide teachers with tools for effective first-teach lessons.

Direct Student Instruction via Intervention

- Provide Co-Support planning to administrators and teachers to create Tier 1, Tier 2, and Tier 3 interventions for predetermined, data-based student groups.
- Create a systematic campus process for student interventions to streamline intervention services and monitor effectiveness.

Student Empowerment

- Directly empower students to control their learning using student data trackers.

Direct Student Instruction via Modeling

- Provide direct instructional support to students by facilitating and modeling rigorous, engaging, and TEKS-aligned lessons that utilize 100% of instructional time.

Direct Student Instruction via Pullouts

- Provide direct instruction to pre-planned student groups who require Tier 2 support using effective, research-based strategies and practices.

Impacting Students with a Culture of Collaboration

- Closely Co-Support teachers to streamline grade-level and subject-area collaboration. Doing so will raise the level of expectation for student performance.

Planning & Instruction Personnel:

District Level:

- Superintendent: Dr. Meza-Chavez
- Associate Superintendent: Dr. Segovia
- Director - Administrative Services: Ms. Jaksch
- Director - Special Education: Ms. Sanchez-Munoz
- Administrator - Instructional Programs: Ms. Frescas
- Administrator - Research & Evaluation: Ms. Renegar
- Administrator - Career & Technical Education: Ms. S. Sanchez
- Instructional Officer - Elementary Reading & Social Studies: Ms. Diaz
- Instructional Officer - Elementary Math & Science: Ms. Cortez
- Instructional Officer - Secondary Reading & Social Studies: Ms. Alvarez
- Instructional Officer - Secondary Math & Science: Mr. Galaviz
- Instructional Officer - All Levels Bilingual Education: Mr. Palomino

Campuses with District Level Co-Support:

Loya Primary

- Principal: Ms. Esquivel
- Campus Improvement Coordinator: Ms. Quinones
- Instructional Specialist: Ms. Sandate
- Intervention Teacher: Ms. Lara
- Instructional Programs Administrator: Ms. Frescas

Sambrano Elementary

- Principal: Mr. Seigel

- Assistant Principal: Ms. Rico
- Instructional Specialist: Ms. Padilla
- Instructional Specialist: Mr. Duran
- Intervention Teacher: Ms. Vergara (currently in the classroom)
- Intervention Teacher: Ms. Garcia (currently in the classroom)
- Instructional Officer: Mr. Palomino

Alarcon Elementary

- Principal: Ms. deSantos
- Assistant Principal: Ms. Robles
- Instructional Specialist: Ms. Talamantes
- Intervention Teacher Math: Ms. Maldonado
- Intervention Teacher Reading: Ms. Carrillo (currently in the classroom)
- Instructional Officers: Ms. Dia and Ms. Cortez

Borrego Elementary

- Principal: Ms. Wilks
- Assistant Principal: Ms. Brashear
- Instructional Specialist: Ms. Nakay
- Intervention Teacher Math: Vacancy
- Intervention Teacher Reading: Ms. Ramirez
- Instructional Officers: Ms. Cortez and Ms. Diaz

Garcia-Enriquez Middle School

- Principal: Mr. Salcido
- Assistant Principal: Mr. Corona
- Campus Improvement Coordinator: Mr. Enriquez
- Instructional Specialist: Ms. Quezada
- Instructional Specialist: Ms. Jara
- Intervention Teacher: Ms. Vitela
- Instructional Officers: Mr. Galaviz and Ms. Alvarez
- CTE Administrator: Ms. S. Sanchez
- Research & Accountability Administrator: Ms. Renegar

San Elizario High School

- Principal: Ms. Marioni
- Assistant Principal: Ms. Pallares
- Assistant Principal: Mr. Parra
- Assistant Principal: Ms. Nunn
- Coordinator of School Improvement: Ms. Esparza
- Instructional Specialist: Ms. Morales
- Instructional Specialist: Ms. Pulido
- CCMR Specialist: Ms. Garcia
- Reading Intervention Teacher: Ms. Gutierrez
- Math Intervention Teacher: Ms. Crews
- Instructional Officers: Ms. Alvarez and Mr. Galaviz
- CTE Administrator: Ms. S. Sanchez
- Research & Accountability Administrator: Ms. Renegar

P & I Co-Support Model Districtwide 2023-2024

Dr. Rogelio Segovia,
Associate Superintendent

May 10, 2023

Changing times call for evolving ways to provide support.

What is the P & I Co-Support Model?

A campus-based approach to providing intensive instructional support to teachers and direct instruction to students.

Driven by A-F Accountability and STAAR Testing Data

Our work with teachers and students centers around data. Areas of need are met with intense work to continually improve.

35

What are some Data-Determined Needs?

Equity for subgroups.

Closing learning gaps.

Math achievement.

Continual academic growth.

36

"Push-In" vs. "Co-Support" Model

What's the Difference?

Co-Support Model

Onsite. Intentional. Cyclical.

Direct work with students.

Intensive support for a fast-paced school week.

38

Preparing for the Co-Support Model

It takes a strong and dedicated team.

Instructional Leadership Planning Meetings

Intensive Preparation Leads to Success.

Weekly meetings for all campus leaders.

Working together on a variety of topics to be ready for 2023-2024.

Bell Schedules

Teacher Schedules

PLC Planning

Interventions

Resources

Tutoring

Enrichment

Scope and Sequence

Assessments

Pre-work for Curriculum and Pacing

The 4-day schedule requires adjustments.

Adjusting the curriculum pacing calendars and aligning the corresponding assessments.

Planning ahead to help teachers stay on track with shorter weeks and pace their instruction during longer school days.

PLC planning with teachers during the whole school year in 2023-2024.

Daily Support.
In-Person.
Helping Teachers.
Teaching Students.

Let’s take a deeper dive to see what Co-Support is all about.

PLC’s and Interventions

P & I will Co-Support each campus during their PLC meetings.

Unit Assessments

Disaggregating Data

Backwards Design Lessons

Intervention Planning

Lesson Modeling

Teaching Struggling Students Directly

Learning Walks and Assessment Creation

Purposeful classroom visits

Focus on newer teachers

Tier-1 instructional focus

Assigned Campuses

Teachers + IO's/IS's create unit assessments

Monitoring

Data disaggregation

Professional Development

Continuous, flexible, and purposeful training.

New Teacher and Mentor Academies.

Bite-Sized Training for Busy Teachers.

45

Co-Support 9-week Cycle

A 9-week cycle of continuous support for teachers and students throughout the 2023-2024 school year.

The Co-Support 9-week Cycle

<u>Weeks 1-7</u>

PLC Planning
Learning Walks
Modeling Lessons
Training
Data Breakdown

Data Talks
Intervention Planning
Direct Student Support

The 9-week Support Cycle

<u>Weeks 8-9</u>

Focused on Direct Student Intervention in the Classroom for Struggling Tier 2 Students.

48

P & I Administrators—
Co-Supporting in Areas of Respective Expertise

- Monitoring
- Operations
- School Culture
- CTE, GT
- Assessments
- Emergent Bilinguals
- Curriculum and Instruction
- CCMR

Instructional Resource Alignment

Ensuring that instructional resources are purposeful, fiscally responsible, aligned, and designated for first-teach or intervention support.

50

Success for Every Teacher. Success for Every Student. Making Every Minute Count.

This is our Co-Support Commitment.

This is your P & I Team.

INSTRUCTIONS FOR TASB BOARD NOMINATIONS

About the TASB Board of Directors

The TASB Board of Directors is charged with carrying out directives established by the Delegates at the Delegate Assembly. The individual Director is expected to attend four Board meetings a year, with one of the meetings being at the same time as the annual TASA/TASB Convention. In addition, the Director will be asked to serve on a standing committee that will meet, as needed, in conjunction with Board meetings. The Director should be a capable, experienced school board member who can assist in providing the Association with outstanding leadership.

How to Nominate a Candidate to the TASB Board

To nominate an individual from your local school board, please complete the following attached forms:

A. Active member's nomination and candidate's willingness to serve
B. Candidate biographical sketch
C. Candidate questionnaire

The completed materials must be received by TASB no later than Friday, June 30, 2023. Nominations that do not meet the deadline cannot be accepted.

TASB will e-mail the nominated individual and the superintendent a confirmation that the forms have been received. If an acknowledgment is not received, contact Lysa Hoelscher at **800.580.8272, extension 2976, or lysa.hoelscher@tasb.org**.

The Next Steps

By July 3, a list of all candidates running for the position will be posted on the TASB website.

The candidate endorsement process runs Monday, July 3–Tuesday, August 29, 2023. During this time, Active Members may endorse one nominated individual from their TASB regions. If a majority of the Active Members of a region endorse a candidate, that individual will be elected to the TASB Board. If at least 25 percent, but not a majority, of the Active Members of a region endorse a candidate, that individual will be included on the official ballot at the TASB Delegate Assembly.

The Nominations Committee will meet Friday, September 8–Saturday, September 9, at TASB Headquarters in Austin to interview candidates and develop a slate of nominees for the Delegate Assembly. The nominated individual will be notified of the time for the interview. Expenses incurred, including lodging and transportation, for the interview are the responsibility of the individual or his or her school district.

If you have questions or need further information, please contact Lysa Hoelscher at **800.580.8272, extension 2976, or lysa.hoelscher@tasb.org**.

We appreciate your participation in this nomination process.

Texas Association of School Boards
Board of Directors Nominations—Frequently Asked Questions

1. Who elects the TASB Board of Directors?

The general governing body of TASB is the Delegate Assembly, which meets each fall on the Saturday of the TASA/TASB Convention. One of the responsibilities of the Assembly is to elect the TASB Board of Directors (TASB Board).

2. Who makes up the Delegate Assembly?

Each Active Member is eligible to designate a Delegate and Alternate from the local board to represent the board's interests at the Delegate Assembly. Either the Delegate or the Alternate, whichever is present on the floor, is the Active Member's voting representative. Members of the TASB Board and the four Legislative Advisory Council members on the TASB Legislative Committee also are voting representatives on the Assembly floor by virtue of their positions.

3. What is an Active Member of TASB?

Active Members are local public school boards and education service center boards that have paid current annual dues.

4. What is the composition of the TASB Board?

The 45-member TASB Board is composed of the President, the President-Elect, the Immediate Past President, and members from the 20 TASB Regions, which follow the boundaries of the education service centers. These Directors are elected to staggered three-year terms, with the exception of the President-Elect, President, and Immediate Past President who serve one-year terms in each position. An education service center representative also is a member of the TASB Board, serving as a voting *ex officio* member.

5. What are the responsibilities of the TASB Board?

The TASB Board actively promotes the purposes of the Association, oversees its fiscal affairs, and establishes Board policies.

6. How are TASB Board positions determined, and why do some TASB Regions have more than one representative?

Representation on the TASB Board is determined by state average daily attendance (ADA). Calculations to determine Board positions are completed each April with ADA data furnished by the Texas Education Agency. The TASB Board has two types of positions: large district and regional.

a. **Large District Members—**An Active Member with at least 1.25 percent of the total state ADA is entitled to a large district position on the TASB Board. Currently, 12 districts qualify as large district members: Aldine ISD, Austin ISD, Conroe ISD, Cypress-Fairbanks ISD, Dallas ISD, Fort Bend ISD, Fort Worth ISD, Frisco ISD, Houston ISD, Katy ISD, North East ISD, and Northside ISD-Bexar County.

b. **Regional Members—**Each of the 20 TASB Regions have a regional member on the TASB Board. However, a TASB Region will gain another position for each 4.25 percent, or fraction thereof, of the total state ADA after subtracting the ADA of each large district member.

7. Does a TASB Director have to be a member of a local school board?

Yes, Directors of the TASB Board must be a member of a local school board that is an Active Member of TASB. Except in the case of the President and the Immediate Past President, a Director of the TASB Board who ceases to be a local school board member automatically vacates his or her position on the TASB Board. The TASB President must be a member of a local board at the time of succession to the office.

8. How do districts know when to nominate an individual for a position on the TASB Board?

On or before April 30, the board president, superintendent and superintendent secretary of each Active Member will be notified that a vacancy or expiring term exists for a position in the Active Member's TASB Region. This information also will be posted on the TASB website.

9. How does an Active Member nominate an individual?

Active Members have until June 30 to place the name of a local board member in nomination for a position. A nomination is accepted when the following completed nominations forms, provided by the Association, are received by TASB:

(1) Form A, Active Member's Nomination and Willingness to Serve form
(2) Form B, Candidate's Biographical Sketch
(3) Form C, Candidate's Questionnaire

The nomination requires local board action, and Form A must be signed by the board president or other board officer and include the date of board action and the candidate.

Once these materials are received, the board president, candidate, and superintendent will receive an e-mail acknowledging the candidacy, along with information regarding the interview with the TASB Nominations Committee.

10. Can an Active Member nominate more than one individual for a position?

No.

11. Can an individual be a candidate for more than one position?

No.

12. What is the endorsement period, and how does an Active Member endorse a nominated individual?

The endorsement period is open July 3–August 31 and is an opportunity for regions to support, or even elect, a candidate nominated to the TASB Board.

During the endorsement period, an Active Member may endorse the candidacy of a nominated individual from another board within their TASB Region. Active Members must use Form D, Endorsement Form, provided by the Association.

It is important to note that TASB Bylaws require local board action for endorsements. Also, the Nominations Committee cannot accept endorsements acted on before July 3 or those not on the form provided by the Association (Form D, Endorsement Form). Completed endorsement forms must be received in TASB Headquarters on or before August 29.

If a majority of Active Members in an Association Region endorse the same candidate, that candidate is elected to the TASB Board and will take office at the completion of the final official session of the TASA/TASB Convention. If more than 25 percent of Active Members in a Region endorses the same candidate, that candidate will be placed on the slate of nominees presented to the Delegate Assembly.

13. How can candidates contact Active Members in their TASB Regions for endorsements?

Upon request, TASB will provide a mailing list to candidates, at no charge.

14. How are vacancies on the TASB Board filled throughout the year?

The TASB Board can fill vacancies that occur during the year. The board president and superintendent of each Active Member within the affected Region will be notified about the vacancy and the process for nominations. The Nominations Committee will interview all candidates and make a recommendation to the TASB Board. The TASB Board will elect an individual to fill the vacancy until the next Delegate Assembly.

15. What is the TASB Nominations Committee, and what is the committee's role in the Delegate Assembly election process?

The TASB Nominations Committee is composed of Directors on the TASB Board. Eleven

committee members and nine alternates are elected by the Board annually. In the election of the committee, the Board considers school district size, geographic location, wealth per student, and other factors, such as gender and ethnicity.
The Nominations Committee meets prior to the Delegate Assembly to interview nominated individuals in Director races that have not been elected by endorsement by the Regions. The Committee prepares a slate of Director nominees by selecting one or more candidates for each open position.

If a Director candidate has received endorsements from a majority of the Active Members in the TASB Region, that individual is automatically elected to the position and will take office after the final Convention session in the year elected.

If no Director candidate has received a majority of the endorsements, the slate of nominees will include the committee's nominees and also will list any nominated individuals who have received endorsements from at least 25 percent, but less than a majority, of the Active Members within their TASB Region.

16. Who pays the nominated individual's expenses incurred in attending the interview with the Nominations Committee?

The candidate's local board typically pays. This is not a TASB expense.

17. Can someone still run for TASB Director if he or she is not chosen by the Nominations Committee and has not received endorsements from at least 25 percent of the Active Members?

Yes. Even if a candidate was not selected as a nominee by the Nominations Committee or did not receive at least 25 percent of the endorsements from his or her region, he or she may still run for a Director position on the TASB Board through the delegate nomination process.

A delegate nomination may be made by the candidate's Delegate, provided the following conditions are met: (a) the candidate's completed nomination materials had been submitted to TASB Headquarters by June 30, (b) the candidate interviewed with the Nominations Committee, and (c) the candidate's intent and consent to run for the position by this alternate means is received in TASB Headquarters at least five days before the annual Delegate Assembly.

18. When are Active Members notified of the official slate of Director and Officer nominees?

The nominations slate of nominees is sent to all Active Members as soon as feasible after the August 29 deadline for Director candidate endorsements and prior to Delegate Assembly.

Officer nominees are selected by the TASB Board at the Summer Board Meeting.

19. What happens if a nominee is unable to serve?

The Nominations Committee, at the call of its chair, will select an alternate Director nominee; and the TASB Board, at the call of its President, will select an alternate Officer nominee. Active Members and their Delegates will be notified of the amended report of the Nominations Committee as soon as feasible, but no later than the opening of the Delegate Assembly.

20. Can candidates in contested races campaign for Delegate votes?

Yes, within certain limit, candidates in contested races can campaign for Delegate votes.

a. **Distribution of Materials—**A candidate can distribute a biographical document on a single sheet of paper no larger than 8-1/2 inches by 14 inches by placing the document on the tables in the caucus meeting rooms organized by the Board and/or the tables in the Delegate Assembly Hall before the start of the Assembly. No buttons or other forms of campaign paraphernalia will be distributed or worn by individuals in these caucus meetings or in the Assembly Hall.

b. **Solicitation of Votes—**Candidates are prohibited from soliciting votes in the vicinity of the Delegate Assembly Hall and at the TASB Board meeting. Other than that, candidates are not prohibited from campaigning elsewhere.

c. **Campaigning at the Delegate Assembly itself—**Aside from distributing a one-page biographical flier, candidates are prohibited from soliciting votes from Delegates outside of the Assembly Hall, at the entrance to the hall, or on the floor of the Assembly.

21. Will nominees be allowed to speak at the Delegate Assembly?

Yes, speeches are allowed in contested races and each nominee is given three minutes, in accordance with the standing rules adopted by the Assembly. Contested nominees speak in alphabetical order for each position; however, the recommended nominee speaks last.

22. At the Delegate Assembly, do Delegates cast their vote for all positions or just those within their TASB Region?

All Delegates of the Assembly may cast a vote in each contested position.

23. How are votes cast, tallied, and reported?

Voting is done by electronic keypads. The Teller Committee supervises the voting and certifies the accuracy of the counts. The Teller Committee Chair reports the results to the Assembly.

24. How is the Teller Committee selected?

The TASB President appoints Delegates to serve on the Delegate Assembly Teller Committee. A Delegate from an Active Member that has a nominee on the slate is ineligible to serve on the Teller Committee.

25. How are the winners determined?

The nominee receiving the majority of the votes of the Delegates present and voting shall be elected. If no nominee receives a majority, a run-off election shall be conducted between the two nominees receiving the greater number of votes, and the election shall be repeated for that position as many times as necessary to obtain a majority.

26. When do the terms of newly elected Directors and Officers begin?

The newly elected Directors and Officers (including those Directors elected by endorsement within their regions) begin serving their terms at the end of the final official session of the Convention.

27. When does the TASB Board meet?

The TASB Board meets four times a year (December, spring, summer, and Convention).

28. Who pays the Director's expenses to attend meetings?

In accordance with TASB Board Policy, TASB will reimburse Directors for the following expenses:

1. Expenses incurred while attending the regular December, Spring, and Summer TASB Board Meetings.
2. Transportation expenses and three nights' lodging expenses incurred by Directors attending the regular Convention Board Meeting held in conjunction with the TASA/TASB Convention.
3. Expenses incurred while attending any other meetings of the TASB Board or standing committees.

29. Whom do I contact for more information?

Contact Lysa Hoelscher at 800.580.8272, extension 2976 or lysa.hoelscher@tasb.org.

ARTICLE VI. BOARD OF DIRECTORS

SECTION 1. ASSOCIATION REGIONS.

The Association Regions shall correspond to the ESC region boundaries.

SECTION 2. QUALIFICATIONS, NOMINATION, ENDORSEMENT, AND ELECTION OF DIRECTORS.

A. Each voting Director shall be a trustee of the governing board of a school district that is an Active Member, except as provided below:

(1) The President and the Immediate Past President.

(2) The ESC *ex officio* Director, in accordance with Article VI, Section 4F.

B. No Active Member shall have more than one candidate running for a Director position before the Delegate Assembly, even if more than one Director position is subject to an expiring term or vacancy within the Active Member's Region. No person shall be a candidate for more than one Director position in an election before the Delegate Assembly.

C. For purposes of this section, an Active Member school district with an average daily attendance (ADA) meeting the requirements of Article VI, Section 4C(1), shall be treated as an Association Region and referred to in these Bylaws as a Large District.

D. Nominations and endorsements shall be accepted in accordance with the following requirements, in chronological order within the time frames and deadlines set out in Board policy:

(1) Active Members in any Association Region in which there are expiring terms or vacancies in Director positions shall be notified by the date established through Board policy that the Active Member may nominate one of its trustees as a candidate for a Director position in which the term is expiring or a vacancy exists within the Active Member's Region.

(2) The Nominations Committee's chair, or designee, shall have received the following in writing in the Austin office of the Association by the deadline established through Board policy:

(a) The Active Member's nomination, in such form as required by the Association, which shall include a verification by the Active Member's board president or other board officer as to the date of board action.

(b) Candidate information required by the Association, which shall include (i) the candidate's written confirmation of his or her intent to be nominated as a candidate and willingness to serve if elected, (ii) biographical information, and (iii) responses to the questionnaire(s) developed by the Association.

(3) A listing of all candidates running for Director positions shall be sent to the superintendent and board president of each Active Member in each Association Region in which there are any expiring terms or vacancies in Director positions by the date established through Board policy. The candidate listing also shall be posted on the Association's website. Candidates, Directors, Delegates, and Active Members shall be subject to any campaign protocols or regulations established through Board policy.

(4) Active Member endorsements of candidates shall be received in the Austin office of the Association by the deadline established through Board policy in order for such endorsements to be considered. An Active Member may endorse only one candidate for each open Director position within its Association Region. Only candidates who have complied with the requirements of Article VI, Section 2D(2), may be endorsed. Endorsements adopted by an Active Member before the Association sends the list of candidates pursuant to Article VI, Section 2D(3), or endorsements that are not on the endorsement form provided by the Association in a given year shall not be accepted. An Active Member's nomination of one of its trustees [Article VI, Section 2D(2)] shall be considered the Active Member's endorsement for that Director position.

(5) If a majority of the Active Members in an Association Region endorses the same candidate, that candidate shall be elected to the Director position and shall take office at the completion of the final official session of the annual convention during the year in which the Director was elected.

(6) If no candidate receives endorsements from a majority of the Active Members in the candidate's Association Region [Article VI, Section 2D(4)], the official annual Delegate Assembly list of nominees shall include the following:

(a) Candidates nominated by the Nominations Committee [Article VIII, Section 2H].

(b) Candidates receiving endorsements from at least 25 percent but less than a majority of the Active Members in an Association Region.

(7) Thereafter nominations may be made by the candidate's Delegate, provided the following conditions are met:

(a) The candidate's nomination was submitted in compliance with Article VI, Section 2D(2).

(b) The candidate interviewed with the Nominations Committee, unless the Committee waived the need for an interview based on criteria set out in Board policy.

(c) The candidate's intent and consent to run for the position by this alternate means is received in the Austin office of the Association five days prior to the annual Delegate Assembly.

E. Except for a Director position filled in accordance with Article VI, Section 2D(5), the official annual Delegate Assembly list of nominees shall be prepared by the Nominations Committee as provided in these Bylaws [Article VIII, Section 2I]. The election shall comply with these Bylaws

and any rules and procedures adopted for the Delegate Assembly at the start of the meeting. Such rules and procedures may allow uncontested nominees to be deemed elected without a vote.

F. If there is more than one nominee for a Director position, the nominee receiving the majority of the votes of the Delegates shall be elected. If no nominee receives a majority vote of the Delegates, a runoff election shall be conducted between the two nominees receiving the greater numbers of votes, and the election shall be repeated for that position as many times as necessary to obtain a majority.

SECTION 3. DUTIES. The Board shall supervise, control, and direct affairs of the Association in accordance with the Articles of Incorporation, Bylaws, beliefs, and Advocacy Agenda approved by the Delegate Assembly. The Board shall:

A. Actively promote the mission, beliefs, and purposes of the Association.

B. Adopt the Association's budget and have discretion in the disbursement of the Association's funds.

C. Receive any devise, bequest, donation, or gift — either for real or personal propery — and hold the same in absolute title or in trust; and invest, reinvest, and manage such property consistently with the mission and purposes of the Association.

D. Establish such Board policies as it deems appropriate in fulfilling its responsibilities under these Bylaws.

E. Appoint such agents as it may consider necessary.

SECTION 4. COMPOSITION.

A. The Association's governing body shall be composed of Directors from Large Districts or Association Regions. No Active Member shall have more than one individual serving on the Board.

B. All Directors shall represent their respective Association Regions, except the President, President-Elect, and Immediate Past President.

C. By virtue of student enrollment, individual Active Members or Association Regions may be eligible for a Director position as follows:

(1) (a) Not more than 14 Active Members shall be entitled to Large District Director positions. To qualify for a Large District Director position, the Active Member shall have had at least 1.25 percent of the total state ADA for two consecutive school years. If more than 14 Active Members qualify for Large District Director positions under this provision, the 14 Active Members with the largest ADA shall qualify.

(b) If the Active Member's ADA falls below 1.25 percent of the total state ADA for two consecutive school years or if an Active Member has qualified for a Large District Director position and that Active Member is no longer one of the 14 school districts with the ADA required under Article VI, Section 4C(1)(a), the Active Member's entitlement to a Large District Director position shall end with the expiration of the current representative's term.

(2) (a) An Association Region shall be entitled to Regional Director positions for each 4.25 percent or fraction thereof of the total state ADA contained within the Association Region for two consecutive school years and after the ADA of each Active Member qualifying for a position by virtue of Article VI, Section 4 C(1), has been subtracted. Notwithstanding the foregoing, an Association Region shall be entitled to no more than three Regional Director positions.

(b) If an Association Region becomes entitled to multiple positions by this provision and then fails to sustain sufficient ADA for the entitlement over two consecutive school years, a Regional Director position shall be eliminated as follows:

i. If a vacancy exists in the Regional Director position, that position shall be eliminated.
ii. If there is more than one vacancy in the Regional Director positions, the vacant position with the first expiring term shall be eliminated.
iii. If there is no vacancy in the Regional Director positions, the existing position with the first expiring term within the Region shall be eliminated at the end of that term.
iv. If there is no vacancy and more than one Regional Director position having the first expiring term in the same year, the position being held by the individual with the least tenure as a Regional Director shall be eliminated at the end of that term.
v. If there is no vacancy and more than one Regional Director position having the first expiring term in the same year and being held by individuals with the same tenure, there shall be a drawing of lots to determine which Regional Director position shall be eliminated at the end of the term.

D. All calculations under this section shall be based on ADA data furnished by the Texas Education Agency available as of April 1 preceding the annual Delegate Assembly.

E. The Executive Director shall be a nonvoting *ex officio* Director and shall not be counted in the quorum of the Board.

F. The ESC boards shall be represented by one voting *ex officio* Director selected by a process and for a term prescribed by guidelines established by the ESC boards, but shall not be counted in the quorum of the Board.

SECTION 5. DURATION OF OFFICE.

A. Unless stated in these Bylaws otherwise, a Board year or annual period relating to a Director or the business of the Board commences at the official close of the annual convention and ends after the same event in the next year.

B. The term of office of each Director shall be three years and shall begin at the completion of the final official session of the annual convention during which the Director was elected by the annual Delegate Assembly.

C. Terms of Directors shall be staggered to allow, to the extent possible, for the election of one-third of the Directors each year. New Director positions shall be assigned to terms to retain this balance; however, if this is not possible, the assignment of terms shall be decided by drawing of lots.

D. Upon election to a three-year term, a Director may be reelected to no more than three additional terms. For purposes of determining a Director term limit, service time attaches to the individual and not the Association Region with which the Director is associated.

E. Upon election or succession to the office of President-Elect, the Director position previously held shall be declared vacant and a successor elected, except as provided in Article VI, Section 4A. Once elected President-Elect, the term limit that applies to a Director position shall no longer apply and shall not prevent the individual from completing the term of one year as President-Elect, one year as President, and one year as Immediate Past President.

SECTION 6. RESIGNATION AND REMOVAL.

A. A Director may resign by submitting a letter of resignation to the President. The resignation shall become effective upon receipt by the President.

B. A Director who is absent from three consecutive regularly scheduled Board meetings or from three consecutive regularly scheduled Standing Committee meetings may be removed from the Director position by a majority vote of all Directors. A Large District Director removed pursuant to this section shall be ineligible to serve for the remainder of the term to which the Director was elected.

C. Any Director may be removed by a two-thirds vote of the Board when, in the Board's judgment, the best interests of the Association would be served by removal.

SECTION 7. MEETINGS.

A. The Board shall hold at least four regular meetings that shall be spread throughout the year, with one taking place during the summer and the last meeting taking place during the week of the annual Delegate Assembly. The Executive Committee of the Board shall determine the dates and locations of the meetings for the upcoming Board year and report the meeting schedule to the Board before the Board year commences. The Board also shall be given 30 days' notice before each regular meeting by electronic means or by any other means accessible to the Directors.

B. Additional meetings of the Board may be called by the President or by the written request of a majority of the Board, provided that a written notice is sent to each Director at least 10 days before the meeting.

C. A meeting of the Board or a committee may be conducted in person or by alternate means, such as teleconference, videoconference, virtual, or any other means by which each participant can communicate with all other participants.

SECTION 8. QUORUM AND VOTING.

A. A quorum shall consist of a majority of the Board.

B. Unless required otherwise by law, the Articles of Incorporation, or these Bylaws, a vote required or permitted to be taken shall be based on the "present and voting" parliamentary standard. No proxy voting shall be permitted.

C. Any action required to be taken at a meeting of Directors, or any action which may be taken at a meeting of the Directors or any committee, may be taken without a meeting if a consent in writing, setting forth the action to be taken, shall have been signed or executed by the number of Directors or committee members as would be necessary to take that action at a meeting at which Directors or members of the committee were present and voted. The Board, by policy or resolution, may increase the number of votes required for an action taken by written consent. A written consent shall be signed or executed and dated by each Director or committee member, and consent may be provided in multiple counterparts. Directors or committee members may provide written consent by facsimile, email (from the email address of record), or any other form of written action from the Director or committee member.

SECTION 9. VACANCIES. The Board may fill vacancies that occur in Director positions by electing an individual, by majority vote, to fill the vacancy until the next annual Delegate Assembly, in accordance with Board policy. At that time, a candidate shall be elected by the annual Delegate Assembly to fill the unexpired term in accordance with Article VI, Section 2D.

TASB NOMINATION FORM

This is to serve as the nomination of a member of our local board to fill a position on the TASB Board of Directors.

CANDIDATE INFORMATION

NAME: _____

SCHOOL DISTRICT: _____

Our school district's board of trustees understands:

1. *Expenses incurred for the candidate to attend the Nominations Committee interview will be the responsibility of the candidate's local school district.*
2. *The local board's nomination of one of its trustees shall be considered the district's endorsement for that Director position.*
3. *A TASB Director's attendance at regular TASB Board meetings is important.*
4. *Lodging and transportation expenses incurred by TASB Directors attending regular spring, summer and December Board meetings are reimbursed by the Association and transportation expenses and three nights' lodging incurred attending the Convention Board meeting are reimbursed by the Association.*

This nomination was approved by our board of trustees at a duly called meeting on _____.
(Date)

_____
Signature of board president or officer *(If candidate is the board president or officer, must be signed by another officer)*

PRINTED NAME (of officer): _____

TITLE (of officer): _____

WILLINGNESS TO SERVE (to be completed by the candidate)

I, _____, confirm my willingness to serve, if elected, as a member of the TASB Board of Directors for Region ____, Position ____.

_____
Signature of candidate

This form is to be used to nominate a member of your Local Board as a candidate to fill a position on the TASB Board of Directors.

Form A, B, & C, must be received by TASB on or before June 30, 2023.

RETURN TO: **E-mail: boardcommunications@tasb.org**
FAX: 512.467.3554

Interviews will be held at TASB Headquarters in Austin on September 8-9, 2023.

TASB BOARD CANDIDATE BIOGRAPHICAL SKETCH

DATE: _____

NAME: _____

MAILING ADDRESS: _____

CITY: _____ ZIP: _____

BUSINESS PHONE: _____ RESIDENCE PHONE: _____

CELL PHONE: _____ FAX NUMBER (if applicable): _____

We communicate with our Board members primarily via e-mail. Please list your preferred email address.

E-MAIL: _____

SCHOOL DISTRICT: _____

LOCAL TERM EXPIRES: _____ YEARS ON BOARD: _____
(Month/year)

Upon expiration of current term on your local board, will you seek reelection?
YES____ NO____

BOARD POSITIONS HELD (including dates): _____

_____

OCCUPATION: _____

CURRENT EMPLOYER: _____ DATES: _____

EDUCATION-HIGH SCHOOL: _____ COLLEGE: _____

OTHER EDUCATION: _____ DEGREES: _____

HOBBIES/SPECIAL INTERESTS: _____

BUSINESS/PROFESSIONAL/CIVIC GROUP MEMBERS (offices held including dates): _____

_____

_____

ADDITIONAL COMMENTS: _____

_____

_____

_____

_____

_____

_____

Please attach a short bio and include a current picture in jpeg format.

TASB BOARD CANDIDATE QUESTIONNAIRE

NAME: _____

SCHOOL DISTRICT: _____

I affirm that my board has approved my candidacy, and the Nominations Form has been submitted to TASB or is included.

1. What motivates you to serve on the TASB Board?

2. The TASB Board is comprised of different viewpoints and passions. What methods do you employ on your local board to foster a cooperative and effective relationship?

3. Service as a TASB Director is a very rewarding experience; however, it is a time-consuming endeavor. Please address your commitment to serve as a Director.

4. Please provide examples of your leadership abilities.

5. If selected, what are some unique characteristics or perspectives you bring to the Board?

6. Describe at least three or four characteristics of a good board member.

7. TASB Directors use technology to communicate and view Board materials. Please explain your comfort level using technology.

8. Describe a critical or serious challenge that your board has faced and tell us about your contributions to the resolution.

9. Excluding public school finance, what do you think are top issues facing public education today? Elaborate on why you think they are critical issues.

10. Describe your involvement at TASB grassroots meetings and/or regional school board association meetings.

11. Additional information: What else would you like for the Committee to know about you?

_____
(Signature of candidate)

_____
(Date)

This form is to be used by a candidate interested in filling a position on the TASB Board of Directors.

Form A, B, & C must be received by TASB on or before June 30, 2023.

RETURN TO: **E-mail: boardcommunications@tasb.org**
FAX: 512.467.3554

Interviews will be held at TASB Headquarters in Austin on September 8-9, 2023.

San Elizario ISD
P.O. Box 920
San Elizario, TX 79849
Phone 915.872.3900
Fax 915.872.3903

MEMORANDUM

To: Members of the Board of Trustees
From: Norberto Rivas, Chief Financial Officer
Subject: Financial Reports - Tax Report
Date: May 10, 2023

HISTORY: The primary source of state funding for Texas school districts is the Foundation School Program (FSP). This program ensures that all school districts, regardless of property wealth, receive "substantially equal access to similar revenue per student at similar tax effort." The District's current tax rate was approved at the September 13, 2022 regular Board meeting for a total rate of $1.0530. The Maintenance & Operations (M&O) rate which pays for items such as staff salaries, supplies, materials, transportation and utilities was $0.9033 while the Interest & Sinking (I&S) rate which pays for bonded debt was $0.1497.

RATIONALE: The purpose of this agenda item is to report collections made for the current 2022 tax year which is based on the levy billed on October 1, 2022.

BUDGET IMPACT: Collections as of March 31, 2023 are summarized below.

	M&O	I&S	Total	Collections
Current Year Levy	$2,989,552	$495,446	$3,484,998	
Current Year Collections	$2,598,186	$430,586	$3,028,772	$3,028,772
Current Year Levy Outstanding	$391,366	$64,860	$456,226	
Prior Year Collections				$120,259
Penalty & Interest Collections				$57,682
Total Collections				$3,206,713

ADMINISTRATIVE RECOMMENDATION: This report is for information only.

Please check one: ☐ For approval ☒ Report / Information only ☐ Recognition only

EL PASO CONSOLIDATED TAX OFFICE
PROPERTY TAX COLLECTION ANALYSIS
9/1/2022 through 3/31/2023

JURISDICTION: 19 SAN ELIZARIO INDEPENDENT SCHOOL DISTRICT

	CURRENT TAX YEAR ($)		PRIOR YEARS ($)		ALL YEARS ($)			COLLECTION FEE ($)	
PERIOD	COLLECTED	CUMULATIVE	COLLECTED	CUMULATIVE	COLLECTED	CUMULATIVE	%	COLLECTED	CUMULATIVE
Sep 2022	-	-	18,559.57	18,559.57	18,559.57	18,559.57	0.53%	3,476.25	3,476.25
Oct 2022	75,815.85	75,815.85	40,754.51	59,314.08	116,570.36	135,129.93	3.88%	7,275.98	10,752.23
Nov 2022	208,556.99	284,372.84	23,866.75	83,180.83	232,423.74	367,553.67	10.55%	4,556.47	15,308.70
Dec 2022	1,139,155.11	1,423,527.95	14,180.16	97,360.99	1,153,335.27	1,520,888.94	43.64%	2,874.20	18,182.90
Jan 2023	1,196,169.73	2,619,697.68	27,938.18	125,299.17	1,224,107.91	2,744,996.85	78.77%	4,835.65	23,018.55
Feb 2023	303,349.50	2,923,047.18	12,465.29	137,764.46	315,814.79	3,060,811.64	87.83%	3,263.32	26,281.87
Mar 2023	122,350.95	3,045,398.13	23,550.04	161,314.50	145,900.99	3,206,712.63	92.01%	4,858.39	31,140.26
Apr 2023									
May 2023									
Jun 2023									
Jul 2023									
Aug 2023									

LEVY		CURRENT	PRIOR	ALL YEARS
Levy-Cert	7/25/2022	-	N/A	N/A
Levy-Billed	10/1/2022	3,537,539.80	611,036.43	4,148,576.23
Adjusted Levy YTD		3,484,997.62	578,688.32	4,063,685.94
Increase/Decrease		(52,542.18)	(32,348.11)	(84,890.29)
Levy Outstanding		456,225.59	458,429.67	914,655.26

REVENUE	CURRENT	PRIOR	ALL YEARS
Total Levy Collected	3,028,772.03	120,258.65	3,149,030.68
Total Penalty & Interest	16,626.10	41,055.85	57,681.95
Total Levy + P&I	3,045,398.13	161,314.50	3,206,712.63
Taxes as percent of levy	86.91%	3.45%	90.36%
P&I as percent of levy	0.48%	1.18%	1.66%
Total as percent of levy	87.39%	4.63%	92.02%
Collection Fee	861.76	30,278.50	31,140.26
Total Collected YTD	3,046,259.89	191,593.00	3,237,852.89

printed 4/3/2023

San Elizario ISD
P.O. Box 920
San Elizario, TX 79849
Phone 915.872.3900
Fax 915.872.3903

MEMORANDUM

To: Members of the Board of Trustees
From: Norberto Rivas, Chief Financial Officer
Subject: Financial Reports – Financial Statements
Date: May 10, 2023

HISTORY: The district's fiscal year runs from July 1st through June 30th. The district's fiscal accounts are audited annually and the results are typically presented at the regular board meeting in November.

RATIONALE: The purpose of this agenda item is to present unaudited interim financial statements as of March 31, 2023 which are attached to this memo. Included are:

- Exhibit G-1: presents budget and actual amounts for the general fund
- Exhibit J-3: presents budget and actual amounts for the debt service fund
- Exhibit C-1: presents the balance sheet for governmental funds
- Exhibit C-3: presents revenues and expenditures for governmental funds
- Exhibit H-4: presents revenues and expenses for internal service funds

BUDGET IMPACT: There is no budget impact associated with this agenda item.

ADMINISTRATIVE RECOMMENDATION: This report is for information only.

Please check one: ☐ For approval ☒ Report / Information only ☐ Recognition only

EXHIBIT G-1

SAN ELIZARIO ISD
SCHEDULE OF REVENUES, EXPENDITURES, AND CHANGES IN FUND BALANCE
BUDGET AND ACTUAL - GENERAL FUND - UNAUDITED
FOR THE NINE MONTHS ENDING MARCH 31, 2023

Data Control Codes		Budgeted Amounts Original	Budgeted Amounts Final	Actual Amounts (GAAP BASIS)	Variance With Final Budget Positive or (Negative)
	REVENUES:				
5700	Total Local and Intermediate Sources	$ 3,463,733	$ 3,813,733	$ 3,298,166	$ (515,567)
5800	State Program Revenues	30,719,267	30,719,267	20,840,304	(9,878,963)
5900	Federal Program Revenues	6,178,882	6,428,882	4,655,501	(1,773,381)
5020	Total Revenues	40,361,882	40,961,882	28,793,971	(12,167,911)
	EXPENDITURES:				
	Current:				
0011	Instruction	18,841,137	18,795,361	13,550,645	5,244,716
0012	Instructional Resources and Media Services	397,879	102,879	62,688	40,191
0013	Curriculum and Instructional Staff Development	217,512	240,512	159,138	81,374
0021	Instructional Leadership	807,052	807,052	595,171	211,881
0023	School Leadership	2,273,514	2,250,514	1,655,494	595,020
0031	Guidance, Counseling and Evaluation Services	1,350,300	1,263,300	879,607	383,693
0032	Social Work Services	204,238	54,238	43,175	11,063
0033	Health Services	423,014	440,014	314,019	125,995
0034	Student (Pupil) Transportation	1,435,155	1,689,855	999,582	690,273
0035	Food Services	4,411,882	4,411,882	2,548,836	1,863,046
0036	Extracurricular Activities	1,265,633	1,250,633	814,861	435,772
0041	General Administration	1,746,111	1,770,111	1,273,356	496,755
0051	Facilities Maintenance and Operations	4,566,073	4,936,849	3,091,942	1,844,907
0052	Security and Monitoring Services	917,760	982,760	678,967	303,793
0053	Data Processing Services	1,271,777	1,283,777	961,732	322,045
0061	Community Services	34,090	34,090	21,031	13,059
	Debt Service:				
0071	Debt Service	95,000	95,000	68,188	26,812
	Capital Outlay:				
0081	Facilities Acquisition and Construction	492,331	470,331	84,342	385,989
	Intergovernmental:				
0099	Other Intergovernmental Charges	44,500	44,500	32,568	11,932
6030	Total Expenditures	40,794,958	40,923,658	27,835,342	13,088,316
1100	Excess (Deficiency) of Revenues Over(Under) Expenditures	(433,076)	38,224	958,629	920,405
	OTHER FINANCING SOURCES (USES):				
7912	Sale of Real and Personal Property	50,000	50,000	25,528	(24,472)
7915	Transfers In	-	-	-	-
8911	Transfers Out (Use)	-	-	-	-
7080	Total Other Financing Sources (Uses)	50,000	50,000	25,528	(24,472)
1200	Net Changes in Fund Balances	(383,076)	88,224	984,157	895,933
0100	Fund Balance - July 1 (Beginning)	-	16,175,027	16,175,027	-
3000	Fund Balance - June 30 (Ending)	$ (383,076)	$ 16,263,251	$ 17,159,184	$ 895,933

EXHIBIT J-3

SAN ELIZARIO ISD
SCHEDULE OF REVENUES, EXPENDITURES, AND CHANGES IN FUND BALANCE
BUDGET AND ACTUAL - DEBT SERVICE FUND - UNAUDITED
FOR THE NINE MONTHS ENDING MARCH 31, 2023

Data Control Codes		Budgeted Amounts Original	Budgeted Amounts Final	Actual Amounts (GAAP BASIS)	Variance With Final Budget Positive or (Negative)
	REVENUES:				
5700	Total Local and Intermediate Sources	$ 505,106	$ 505,106	$ 487,576	$ (17,530)
5800	State Program Revenues	1,129,516	1,129,516	1,192,365	62,849
5020	Total Revenues	1,634,622	1,634,622	1,679,941	45,319
	EXPENDITURES:				
	Debt Service:				
0071	Debt Service	1,622,868	1,622,868	459,184	1,163,684
6030	Total Expenditures	1,622,868	1,622,868	459,184	1,163,684
1100	Excess (Deficiency) of Revenues Over(Under) Expenditures	11,754	11,754	1,220,757	1,209,003
	OTHER FINANCING SOURCES (USES):				
7915	Transfers In	-	-	-	-
7916	Premium or Discount on Issuance of Bonds	-	-	-	-
8949	Transfers Out (Use)	-	-	-	-
7080	Total Other Financing Sources (Uses)	-	-	-	-
1200	Net Changes in Fund Balances	11,754	11,754	1,220,757	1,209,003
0100	Fund Balance - July 1 (Beginning)	-	294,129	294,129	-
3000	Fund Balance - June 30 (Ending)	$ 11,754	$ 305,883	$ 1,514,886	$ 1,209,003

EXHIBIT C-1

SAN ELIZARIO ISD
BALANCE SHEET
GOVERNMENTAL FUNDS - UNAUDITED
AS OF MARCH 31, 2023

Data Control Codes		General Fund	Other Funds	Total Governmental Funds
	ASSETS			
1110	Cash and Cash Equivalents	$ 15,952,035	$ 1,904,224	$ 17,856,259
1220	Property Taxes - Delinquent	605,232	70,481	675,713
1230	Allowance for Uncollectible Taxes (Credit)	(55,505)	(6,181)	(61,686)
1240	Receivables from Other Governments	289,611	3,737,236	4,026,847
1250	Accrued Interest	170	-	170
1260	Due from Other Funds	4,409,604	323,010	4,732,614
1300	Inventories	207,057	-	207,057
1410	Prepayments	-	-	-
1000	Total Assets	21,408,204	6,028,770	27,436,974
	LIABILITIES			
2110	Accounts Payable	252,253	143,500	395,753
2150	Payroll Deductions and Withholdings Payable	335,662	-	335,662
2160	Accrued Wages Payable	1,534,892	297,567	1,832,459
2170	Due to Other Funds	1,436,979	3,304,588	4,741,567
2180	Due to Other Governments	-	2,500	2,500
2200	Accrued Expenditures	84,556	-	84,556
2300	Unearned Revenues	54,947	4,892	59,839
2000	Total Liabilities	3,699,289	3,753,047	7,452,336
	DEFERRED INFLOWS OF RESOURCES			
2601	Unavailable Revenue - Property Taxes	549,727	64,300	614,027
2600	Total Deferred Inflows of Resources	549,727	64,300	614,027
	FUND BALANCES			
	Nonspendable Fund Balance:			
3410	Inventories	152,110	-	152,110
	Restricted Fund Balance:			
3450	Federal or State Funds Grant Restriction	1,235,108	147,311	1,382,419
3470	Capital Acquisition and Contractual Obligation	-	369,331	369,331
3480	Retirement of Long-Term Debt	-	1,514,886	1,514,886
3490	Other Restricted Fund Balance	-	179,897	179,897
3510	Committed Fund Balance - Construction	-	-	-
3600	Unassigned Fund Balance	15,771,967	-	15,771,967
3000	Total Fund Balances	17,159,185	2,211,425	19,370,610
4000	Total Liabilities, Deferred Inflows & Fund Balances	$ 21,408,204	$ 6,028,770	$ 27,436,974

EXHIBIT C-3

SAN ELIZARIO ISD
STATEMENT OF REVENUES, EXPENDITURES, AND CHANGES IN FUND BALANCE
GOVERNMENTAL FUNDS - UNAUDITED
FOR THE NINE MONTHS ENDING MARCH 31, 2023

Data Control Codes		General Fund	Other Funds	Total Governmental Funds
	REVENUES:			
5700	Total Local and Intermediate Sources	$ 3,298,166	$ 606,520	$ 3,904,686
5800	State Program Revenues	20,840,304	1,261,381	22,101,685
5900	Federal Program Revenues	4,655,501	7,719,806	12,375,307
5020	Total Revenues	28,793,971	9,587,707	38,381,678
	EXPENDITURES:			
	Current:			
0011	Instruction	13,550,645	4,794,248	18,344,893
0012	Instructional Resources and Media Services	62,688	288,542	351,230
0013	Curriculum Instructional Staff Development	159,138	965,367	1,124,505
0021	Instructional Leadership	595,171	104,575	699,746
0023	School Leadership	1,655,494	301,809	1,957,303
0031	Guidance, Counseling and Evaluation Services	879,607	308,084	1,187,691
0032	Social Work Services	43,175	104,088	147,263
0033	Health Services	314,019	148,595	462,614
0034	Student (Pupil) Transportation	999,582	131,396	1,130,978
0035	Food Services	2,548,836	60,664	2,609,500
0036	Extracurricular Activities	814,861	109,814	924,675
0041	General Administration	1,273,356	14,943	1,288,299
0051	Facilities Maintenance and Operations	3,091,942	214,901	3,306,843
0052	Security and Monitoring Services	678,967	84,748	763,715
0053	Data Processing Services	961,732	8,979	970,711
0061	Community Services	21,031	207,441	228,472
	Debt Service:			
0071	Debt Service	68,188	459,184	527,372
	Capital Outlay:			
0081	Facilities Acquisition and Construction	84,342	175,977	260,319
	Intergovernmental:			
0099	Other Intergovernmental Charges	32,568	-	32,568
6030	Total Expenditures	27,835,342	8,483,355	36,318,697
1100	Excess (Deficiency) of Revenues Over(Under) Expenditures	958,629	1,104,352	2,062,981
	OTHER FINANCING SOURCES (USES)			
7912	Sale of Real and Personal Property	25,528	-	25,528
7915	Transfers In	-	-	-
8911	Transfers Out (Use)	-	-	-
7080	Total Other Financing Sources (Uses)	25,528	-	25,528
1200	Net Change in Fund Balances	984,157	1,104,352	2,088,509
0100	Fund Balance - July 1 (Beginning)	16,175,027	1,107,072	17,282,099
1300	Prior Period Adjustment	-	-	-
3000	Fund Balance - June 30 (Ending)	$ 17,159,184	$ 2,211,424	$ 19,370,608

EXHIBIT H-4

SAN ELIZARIO ISD
COMBINING STATEMENT OF REVENUES, EXPENSES AND CHANGES IN FUND NET POSITION
INTERNAL SERVICE FUNDS - UNAUDITED
FOR THE NINE MONTHS ENDING MARCH 31, 2023

	753 Self Insurance Health Fund	770 Self Insurance W/ Comp Fund	Total Internal Service Funds
OPERATING REVENUES:			
Local and Intermediate Sources	$ 3,371,111	$ 106,110	$ 3,477,221
Total Operating Revenues	3,371,111	106,110	3,477,221
OPERATING EXPENSES:			
Professional and Contracted Services	2,615,629	278,642	2,894,271
Other Operating Costs	826,016	-	826,016
Total Operating Expenses	3,441,645	278,642	3,720,287
Operating Income (Loss)	(70,534)	(172,532)	(243,066)
NONOPERATING REVENUES (EXPENSES):			
Earnings from Temporary Deposits & Investments	829	33,556	34,385
Total Nonoperating Revenues (Expenses)	829	33,556	34,385
Income (Loss) Before Transfers	(69,705)	(138,976)	(208,681)
Transfer In	-	-	-
Change in Net Position	(69,705)	(138,976)	(208,681)
Total Net Position - July 1 (Beginning)	42,931	1,087,526	1,130,457
Total Net Position - June 30 (Ending)	$ (26,774)	$ 948,550	$ 921,776

San Elizario ISD
P.O. Box 920
San Elizario, TX 79849
Phone 915.872.3900
Fax 915.872.3903

MEMORANDUM

To: Members of the Board of Trustees
From: Norberto Rivas, Chief Financial Officer
Subject: Financial Reports – Investment Report
Date: May 10, 2023

HISTORY: Not less than quarterly, the investment officer shall prepare and submit to the board a written report of investment transactions for all funds covered by the Public Funds Investment Act for the preceding report period in accordance with section 2256.023 of the Texas Government Code.

RATIONALE: The purpose of this agenda item is to present that investment report for the month of March 2023.

BUDGET IMPACT: Interest earned by fund is summarized in the investment report which is attached to this memo.

ADMINISTRATIVE RECOMMENDATION: This report is for information only.

Please check one: ☐ For approval ☒ Report / Information only ☐ Recognition only

San Elizario I.S.D.
Statement of Interest Earned
For The Nine Months Ending March 31, 2023

General Fund	**$**	**311,635.34**
Interest & Sinking (Debt Service) Fund	**$**	**22,256.62**
Capital Projects Fund	**$**	**10,076.65**
Health Insurance Fund	**$**	**828.95**
Workers Compensation Fund	**$**	**33,556.30**
Total	**$**	**378,353.86**

We, the undersigned Investment Officers, do hereby certify that the above investment information, is in compliance with Board Policy (CDA Local) and requirements stated in Sec. 2256.023 of the PFIA.

Norberto Rivas — **April 24, 2023**

Chief Financial Officer — **Date**

Portfolio Diversification

By Investment Type	**Current Market Value**		**Portfolio %**
Investment Pools	$	17,602,874	89.54%
Certificates of Deposit	$	250,000	1.27%
Checking Accounts	$	1,805,341	9.18%
	$	19,658,215	

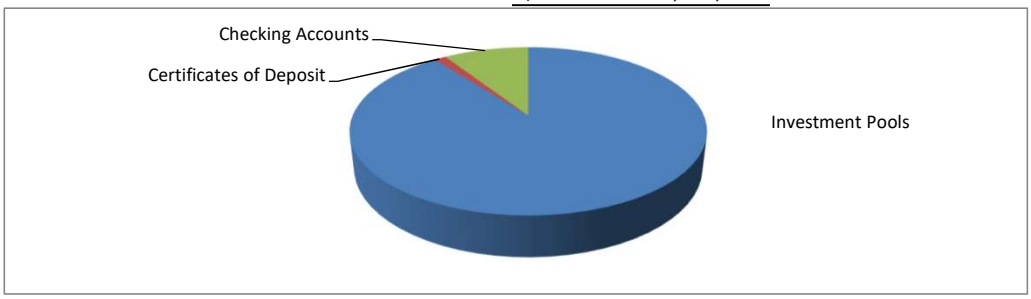

By Investment Maturity	**Current Market Value**		**Portfolio %**
Overnight	$	19,408,215	98.73%
0 - 1 Year	$	-	0.00%
1 - 2 Years	$	250,000	1.27%
2 + years	$	-	0.00%
	$	19,658,215	

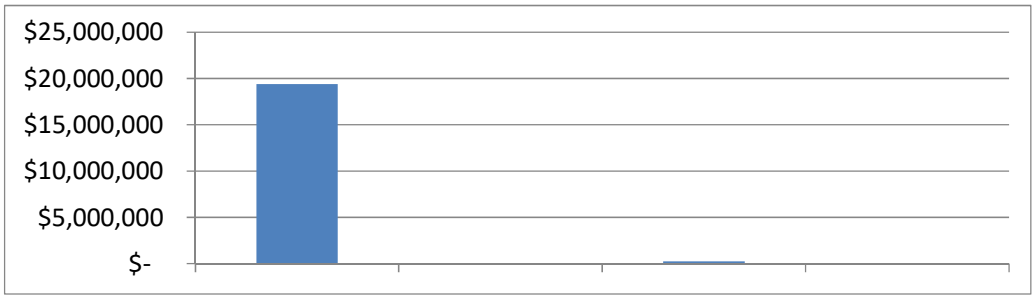

General Fund

Wells Fargo- General Operating Checking Account

Beginning Date	*Ending Date*	*Maturity*	*Bank Balance*	*Interest Rate*	*Interest Earned*
01-Jul-22	31-Jul-22	Overnight	$ 981,356.69	0.00%	$ -
01-Aug-22	31-Aug-22	Overnight	$ 1,101,549.85	0.00%	$ -
01-Sep-22	30-Sep-22	Overnight	$ 921,560.33	0.00%	$ -
01-Oct-22	31-Oct-22	Overnight	$ 1,289,880.16	0.00%	$ -
01-Nov-22	30-Nov-22	Overnight	$ 1,002,005.44	0.00%	$ -
01-Dec-22	31-Dec-22	Overnight	$ 737,276.37	0.00%	$ -
01-Jan-23	31-Jan-23	Overnight	$ 1,479,442.35	0.00%	$ -
01-Feb-23	28-Feb-23	Overnight	$ 1,198,576.64	0.00%	$ -
01-Mar-23	31-Mar-23	Overnight	$ 1,241,482.25	0.00%	$ -
01-Apr-23	30-Apr-23	Overnight	$ -	0.00%	$ -
01-May-23	31-May-23	Overnight	$ -	0.00%	$ -
01-Jun-23	30-Jun-23	Overnight	$ -	0.00%	$ -
				Interest Earned:	**$ -**

Wells Fargo- Food Service Checking Account

Beginning Date	*Ending Date*	*Maturity*	*Bank Balance*	*Interest Rate*	*Interest Earned*
01-Jul-22	31-Jul-22	Overnight	$ 8,478.85	0.00%	$ -
01-Aug-22	31-Aug-22	Overnight	$ 25,898.35	0.00%	$ -
01-Sep-22	30-Sep-22	Overnight	$ 42,470.85	0.00%	$ -
01-Oct-22	31-Oct-22	Overnight	$ 53,027.90	0.00%	$ -
01-Nov-22	30-Nov-22	Overnight	$ 76,932.49	0.00%	$ -
01-Dec-22	31-Dec-22	Overnight	$ 87,541.30	0.00%	$ -
01-Jan-23	31-Jan-23	Overnight	$ 99,415.03	0.00%	$ -
01-Feb-23	28-Feb-23	Overnight	$ 114,994.55	0.00%	$ -
01-Mar-23	31-Mar-23	Overnight	$ 126,342.40	0.00%	$ -
01-Apr-23	30-Apr-23	Overnight	$ -	0.00%	$ -
01-May-23	31-May-23	Overnight	$ -	0.00%	$ -
01-Jun-23	30-Jun-23	Overnight	$ -	0.00%	$ -
				Interest Earned:	**$ -**

Lone Star Investment Pool- Corporate Overnight Plus Fund

Beginning Date	*Ending Date*	*Maturity*	*Bank Balance*	*Interest Rate*	*Interest Earned*
01-Jul-22	31-Jul-22	Overnight	$ 6,346,975.40	1.73%	$ 10,076.29
01-Aug-22	31-Aug-22	Overnight	$ 2,712,572.75	2.43%	$ 10,721.67
01-Sep-22	30-Sep-22	Overnight	$ 6,541,945.47	2.68%	$ 8,425.44
01-Oct-22	31-Oct-22	Overnight	$ 5,147,071.15	3.25%	$ 15,532.12
01-Nov-22	30-Nov-22	Overnight	$ 6,146,613.64	3.99%	$ 18,642.92
01-Dec-22	31-Dec-22	Overnight	$ 6,117,708.05	4.39%	$ 20,606.48
01-Jan-23	31-Jan-23	Overnight	$ 8,309,988.80	4.58%	$ 22,145.82
01-Feb-23	28-Feb-23	Overnight	$ 7,412,417.87	4.79%	$ 31,386.78
01-Mar-23	31-Mar-23	Overnight	$ 7,365,477.42	4.85%	$ 29,979.78
01-Apr-23	30-Apr-23	Overnight	$ -	0.00%	$ -
01-May-23	31-May-23	Overnight	$ -	0.00%	$ -
01-Jun-23	30-Jun-23	Overnight	$ -	0.00%	$ -
				Interest Earned:	**$ 167,517.30**

Lone Star Investment Pool- Corporate Overnight Fund

Beginning Date	*Ending Date*	*Maturity*		*Bank Balance*	*Interest Rate*		*Interest Earned*
01-Jul-22	31-Jul-22	Overnight	$	350,296.81	1.70%	$	503.95
01-Aug-22	31-Aug-22	Overnight	$	351,018.21	2.42%	$	721.40
01-Sep-22	30-Sep-22	Overnight	$	401,855.10	2.67%	$	836.89
01-Oct-22	31-Oct-22	Overnight	$	402,964.29	3.25%	$	1,109.19
01-Nov-22	30-Nov-22	Overnight	$	404,276.02	3.96%	$	1,311.73
01-Dec-22	31-Dec-22	Overnight	$	405,762.12	4.33%	$	1,486.10
01-Jan-23	31-Jan-23	Overnight	$	482,375.74	4.55%	$	1,613.62
01-Feb-23	28-Feb-23	Overnight	$	484,131.18	4.79%	$	1,755.44
01-Mar-23	31-Mar-23	Overnight	$	486,121.82	4.84%	$	1,990.64
01-Apr-23	30-Apr-23	Overnight	$	-	0.00%	$	-
01-May-23	31-May-23	Overnight	$	-	0.00%	$	-
01-Jun-23	30-Jun-23	Overnight	$	-	0.00%	$	-
					Interest Earned:	**$**	**11,328.96**

Lone Star Investment Pool- Government Overnight Fund

Beginning Date	*Ending Date*	*Maturity*		*Bank Balance*	*Interest Rate*		*Interest Earned*
01-Jul-22	31-Jul-22	Overnight	$	399,157.04	1.51%	$	414.69
01-Aug-22	31-Aug-22	Overnight	$	592,538.66	2.15%	$	781.94
01-Sep-22	30-Sep-22	Overnight	$	624,476.36	2.48%	$	1,255.76
01-Oct-22	31-Oct-22	Overnight	$	685,156.98	3.07%	$	1,699.96
01-Nov-22	30-Nov-22	Overnight	$	913,422.13	3.74%	$	2,502.45
01-Dec-22	31-Dec-22	Overnight	$	1,728,286.77	4.08%	$	3,983.33
01-Jan-23	31-Jan-23	Overnight	$	2,770,893.55	4.31%	$	8,226.29
01-Feb-23	28-Feb-23	Overnight	$	3,261,712.56	4.58%	$	10,938.07
01-Mar-23	31-Mar-23	Overnight	$	3,407,111.23	4.64%	$	13,162.53
01-Apr-23	30-Apr-23	Overnight	$	-	0.00%	$	-
01-May-23	31-May-23	Overnight	$	-	0.00%	$	-
01-Jun-23	30-Jun-23	Overnight	$	-	0.00%	$	-
					Interest Earned:	**$**	**42,965.02**

Texas CLASS Investment Pool- General Fund

Beginning Date	*Ending Date*	*Maturity*		*Bank Balance*	*Interest Rate*		*Interest Earned*
01-Jul-22	31-Jul-22	Overnight	$	3,199,369.30	1.64%	$	4,450.85
01-Aug-22	31-Aug-22	Overnight	$	3,205,595.03	2.29%	$	6,225.73
01-Sep-22	30-Sep-22	Overnight	$	3,212,660.85	2.68%	$	7,065.82
01-Oct-22	31-Oct-22	Overnight	$	3,221,481.93	3.23%	$	8,821.08
01-Nov-22	30-Nov-22	Overnight	$	3,231,703.22	3.85%	$	10,221.29
01-Dec-22	31-Dec-22	Overnight	$	3,243,572.49	4.32%	$	11,869.27
01-Jan-23	31-Jan-23	Overnight	$	3,256,196.15	4.57%	$	12,623.66
01-Feb-23	28-Feb-23	Overnight	$	3,268,100.19	4.76%	$	11,904.04
01-Mar-23	31-Mar-23	Overnight	$	3,281,615.22	4.86%	$	13,515.03
01-Apr-23	30-Apr-23	Overnight	$	-	0.00%	$	-
01-May-23	31-May-23	Overnight	$	-	0.00%	$	-
01-Jun-23	30-Jun-23	Overnight	$	-	0.00%	$	-
					Interest Earned:	**$**	**86,696.77**

GECU- Certificate of Deposit (Date Opened: 4/21/2021 Maturity Date: 4/21/2024)

Beginning Date	*Ending Date*	*Maturity*		*Bank Balance*	*Interest Rate*		*Interest Earned*
01-Jul-22	31-Jul-22	1 - 2 years	$	250,000.00	0.80%	$	169.86
01-Aug-22	31-Aug-22	1 - 2 years	$	250,000.00	0.80%	$	169.86
01-Sep-22	30-Sep-22	1 - 2 years	$	250,000.00	0.80%	$	164.38
01-Oct-22	31-Oct-22	1 - 2 years	$	250,000.00	0.80%	$	169.86
01-Nov-22	30-Nov-22	1 - 2 years	$	250,000.00	0.80%	$	164.38
01-Dec-22	31-Dec-22	1 - 2 years	$	250,000.00	0.80%	$	169.86
01-Jan-23	31-Jan-23	1 - 2 years	$	250,000.00	0.80%	$	169.86
01-Feb-23	28-Feb-23	1 - 2 years	$	250,000.00	0.80%	$	153.42
01-Mar-23	31-Mar-23	1 - 2 years	$	250,000.00	0.80%	$	169.86
01-Apr-23	30-Apr-23	0 - 1 years	$	-	0.80%	$	-
01-May-23	31-May-23	0 - 1 years	$	-	0.80%	$	-
01-Jun-23	30-Jun-23	0 - 1 years	$	-	0.80%	$	-
					Interest Earned:	**$**	**1,501.34**

FLFCU- Certificate of Deposit (Date Opened: 11/6/2019 Maturity Date: 11/6/2022)

Beginning Date	*Ending Date*	*Maturity*		*Bank Balance*	*Interest Rate*		*Interest Earned*
01-Jul-22	31-Jul-22	0 - 1 years	$	250,000.00	1.93%	$	409.79
01-Aug-22	31-Aug-22	0 - 1 years	$	250,000.00	1.93%	$	409.79
01-Sep-22	30-Sep-22	0 - 1 years	$	250,000.00	1.93%	$	396.58
01-Oct-22	31-Oct-22	0 - 1 years	$	250,000.00	1.93%	$	409.79
01-Nov-22	30-Nov-22	0 - 1 years	$	-	1.93%	$	-
					Interest Earned:	**$**	**1,625.95**

Total General Fund Interest Earned	**$**	**311,635.34**

Interest & Sinking Fund (Debt Service)

Lone Star Investment Pool- Corporate Overnight Plus Fund

Beginning Date	*Ending Date*	*Maturity*	*Bank Balance*	*Interest Rate*	*Interest Earned*
01-Jul-22	31-Jul-22	Overnight	$ 204,419.34	1.73%	$ 300.15
01-Aug-22	31-Aug-22	Overnight	$ 204,841.70	2.43%	$ 422.36
01-Sep-22	30-Sep-22	Overnight	$ 205,292.48	2.68%	$ 450.78
01-Oct-22	31-Oct-22	Overnight	$ 205,859.13	3.25%	$ 566.65
01-Nov-22	30-Nov-22	Overnight	$ 206,534.13	3.99%	$ 675.00
01-Dec-22	31-Dec-22	Overnight	$ 993,278.58	4.39%	$ 2,344.46
01-Jan-23	31-Jan-23	Overnight	$ 997,137.36	4.57%	$ 3,858.78
01-Feb-23	28-Feb-23	Overnight	$ 1,000,776.44	4.79%	$ 3,639.08
01-Mar-23	31-Mar-23	Overnight	$ 1,004,902.08	4.85%	$ 4,125.64
01-Apr-23	30-Apr-23	Overnight	$ -	0.00%	$ -
01-May-23	31-May-23	Overnight	$ -	0.00%	$ -
01-Jun-23	30-Jun-23	Overnight	$ -	0.00%	$ -
				Interest Earned:	**$ 16,382.90**

Lone Star Investment Pool- Government Overnight Fund

Beginning Date	*Ending Date*	*Maturity*	*Bank Balance*	*Interest Rate*	*Interest Earned*
01-Jul-22	31-Jul-22	Overnight	$ 42,256.23	1.51%	$ 51.82
01-Aug-22	31-Aug-22	Overnight	$ 47,307.16	2.15%	$ 83.13
01-Sep-22	30-Sep-22	Overnight	$ 52,369.16	2.48%	$ 103.94
01-Oct-22	31-Oct-22	Overnight	$ 62,126.25	3.07%	$ 148.17
01-Nov-22	30-Nov-22	Overnight	$ 99,447.81	3.74%	$ 255.60
01-Dec-22	31-Dec-22	Overnight	$ 234,148.52	4.08%	$ 479.96
01-Jan-23	31-Jan-23	Overnight	$ 403,936.65	4.31%	$ 1,169.73
01-Feb-23	28-Feb-23	Overnight	$ 484,989.73	4.58%	$ 1,620.30
01-Mar-23	31-Mar-23	Overnight	$ 508,009.49	4.64%	$ 1,961.07
01-Apr-23	30-Apr-23	Overnight	$ -	0.00%	$ -
01-May-23	31-May-23	Overnight	$ -	0.00%	$ -
01-Jun-23	30-Jun-23	Overnight	$ -	0.00%	$ -
				Interest Earned:	**$ 5,873.72**

Total Debt Service Fund Interest Earned **$ 22,256.62**

Capital Projects Fund

2015 Bond Construction Fund - Government Overnight Fund

Beginning Date	*Ending Date*	*Maturity*	*Bank Balance*	*Interest Rate*	*Interest Earned*
01-Jul-22	31-Jul-22	Overnight	$ 540,358.38	1.51%	$ 773.48
01-Aug-22	31-Aug-22	Overnight	$ 376,541.49	2.15%	$ 966.03
01-Sep-22	30-Sep-22	Overnight	$ 377,310.32	2.48%	$ 768.83
01-Oct-22	31-Oct-22	Overnight	$ 378,294.92	3.07%	$ 984.60
01-Nov-22	30-Nov-22	Overnight	$ 379,457.86	3.74%	$ 1,162.94
01-Dec-22	31-Dec-22	Overnight	$ 380,772.25	4.08%	$ 1,314.39
01-Jan-23	31-Jan-23	Overnight	$ 366,605.17	4.31%	$ 1,380.71
01-Feb-23	28-Feb-23	Overnight	$ 367,880.92	4.58%	$ 1,275.75
01-Mar-23	31-Mar-23	Overnight	$ 369,330.84	4.64%	$ 1,449.92
01-Apr-23	30-Apr-23	Overnight	$ -	0.00%	$ -
01-May-23	31-May-23	Overnight	$ -	0.00%	$ -
01-Jun-23	30-Jun-23	Overnight	$ -	0.00%	$ -
				Interest Earned:	**$ 10,076.65**

Total Capital Projects Fund Interest Earned **$ 10,076.65**

Health Insurance Fund

Wells Fargo- Health Insurance

Beginning Date	*Ending Date*	*Maturity*	*Bank Balance*	*Interest Rate*	*Interest Earned*
01-Jul-22	31-Jul-22	Overnight	$ 73,407.61	0.40%	$ 70.56
01-Aug-22	31-Aug-22	Overnight	$ 302,203.73	0.40%	$ 43.81
01-Sep-22	30-Sep-22	Overnight	$ 22,751.93	0.40%	$ 52.20
01-Oct-22	31-Oct-22	Overnight	$ 61,631.44	0.50%	$ 70.07
01-Nov-22	30-Nov-22	Overnight	$ 231,287.21	0.59%	$ 74.67
01-Dec-22	31-Dec-22	Overnight	$ 297,630.81	0.68%	$ 152.27
01-Jan-23	31-Jan-23	Overnight	$ 181,134.19	0.70%	$ 97.47
01-Feb-23	28-Feb-23	Overnight	$ 301,969.69	0.80%	$ 120.24
01-Mar-23	31-Mar-23	Overnight	$ 361,989.31	0.82%	$ 147.66
01-Apr-23	30-Apr-23	Overnight	$ -	0.00%	$ -
01-May-23	31-May-23	Overnight	$ -	0.00%	$ -
01-Jun-23	30-Jun-23	Overnight	$ -	0.00%	$ -
				Interest Earned:	**$ 828.95**

Total Health Insurance Fund Interest Earned **$ 828.95**

Workers Compensation Fund

Wells Fargo- Worker's Compensation

Beginning Date	*Ending Date*	*Maturity*	*Bank Balance*	*Interest Rate*	*Interest Earned*
01-Jul-22	31-Jul-22	Overnight	$ 107,073.37	0.40%	$ 38.50
01-Aug-22	31-Aug-22	Overnight	$ 117,622.01	0.40%	$ 34.28
01-Sep-22	30-Sep-22	Overnight	$ 150,436.37	0.40%	$ 44.96
01-Oct-22	31-Oct-22	Overnight	$ 125,573.74	0.50%	$ 59.16
01-Nov-22	30-Nov-22	Overnight	$ 118,839.44	0.59%	$ 59.64
01-Dec-22	31-Dec-22	Overnight	$ 119,728.44	0.66%	$ 67.10
01-Jan-23	31-Jan-23	Overnight	$ 196,262.95	0.70%	$ 76.40
01-Feb-23	28-Feb-23	Overnight	$ 195,166.34	0.80%	$ 118.21
01-Mar-23	31-Mar-23	Overnight	$ 75,527.28	0.83%	$ 67.19
01-Apr-23	30-Apr-23	Overnight	$ -	0.00%	$ -
01-May-23	31-May-23	Overnight	$ -	0.00%	$ -
01-Jun-23	30-Jun-23	Overnight	$ -	0.00%	$ -
				Interest Earned:	**$ 565.44**

Lone Star Investment Pool- Corporate Overnight Fund

Beginning Date	*Ending Date*	*Maturity*	*Bank Balance*	*Interest Rate*	*Interest Earned*
01-Jul-22	31-Jul-22	Overnight	$ 1,274,148.16	1.70%	$ 1,833.22
01-Aug-22	31-Aug-22	Overnight	$ 1,276,772.15	2.42%	$ 2,623.99
01-Sep-22	30-Sep-22	Overnight	$ 1,229,510.61	2.67%	$ 2,738.46
01-Oct-22	31-Oct-22	Overnight	$ 1,232,904.25	3.25%	$ 3,393.64
01-Nov-22	30-Nov-22	Overnight	$ 1,236,917.62	3.96%	$ 4,013.37
01-Dec-22	31-Dec-22	Overnight	$ 1,241,464.46	4.33%	$ 4,546.84
01-Jan-23	31-Jan-23	Overnight	$ 1,171,210.31	4.55%	$ 4,745.85
01-Feb-23	28-Feb-23	Overnight	$ 1,175,472.53	4.79%	$ 4,262.22
01-Mar-23	31-Mar-23	Overnight	$ 1,180,305.80	4.84%	$ 4,833.27
01-Apr-23	30-Apr-23	Overnight	$ -	0.00%	$ -
01-May-23	31-May-23	Overnight	$ -	0.00%	$ -
01-Jun-23	30-Jun-23	Overnight	$ -	0.00%	$ -
				Interest Earned:	**$ 32,990.86**

Total Worker's Compensation Fund Interest Earned : **$ 33,556.30**

Lone★Star
Investment Pool

Distributed by FIRST PUBLIC® Member FINRA/SIPC

First Public
12007 Research Blvd.
Austin, Texas 78759
800-558-8875 • firstpublic.com

Fund Performance Update

March 31, 2023

Comments by Mellon, Investment Manager

Custodian Bank: State Street Bank

Investment Managers:
American Beacon Advisors and
Mellon Investments Corp (Dreyfus)

The Lone Star Investment Pool is endorsed by:

TASA TASB

The Lone Star Investment Pool Information Statement should be read carefully before investing. Investors should consider the investment objectives, risks, changes, and expenses associated with this or any security prior to investing. Investment in Lone Star Investment Pool is not insured or guaranteed by the Federal Deposit Insurance Corporation (FDIC) or any other government agency, and although Lone Star seeks to preserve the value of the investment at a fixed share price, it is possible to lose money by investing in Lone Star. For further information or for an Information Statement contact First Public at 800-558-8875. The return information is net of all current operating expenses. The return represents past performance and is no indication of future results.

US Treasury yields fell in March and the curve became less inverted, largely due to uncertainty in the banking sector. Silicon Valley Bank (SVB) became the second-largest bank to fail in US history. SVB experienced large deposits over the past few years, mostly from tech companies and venture capital firms. This deposit money was invested in long-term US Treasury assets at low yields. To cover withdrawals, these assets had to be sold at much lower prices as yields rose, resulting in large losses. News of these losses resulted in a “bank run” ultimately causing the bank to fail. Yields were lower by as much as 79 basis points during the month with the two-year Treasury note leading the way. The stress in the banking sector led to less certainty at the March 22 Federal Open Market Committee (FOMC) meeting, but the Federal Reserve (Fed) delivered another hike of 25 basis points to raise the target rate to a range of 4.75% to 5.00%. At the end of March, the federal funds futures market was pricing in approximately a 65% chance of another hike at the May 3 FOMC meeting. After that meeting, the futures market is pricing in rate cuts by the end of 2023.

Active Participants This Month

Schools and Colleges	578
Other Governmental Entities	82
Total	*660*

Lone★Star
Investment Pool

Government Overnight Fund

Return Information
March 31, 2023

Average Monthly Return (a)	4.64%
SEC 7-day Fund Yield (b)	4.83%
Weighted Average Maturity One (c)	15 days
Weighted Average Maturity Two (c)	66 days
Portfolio Maturing beyond One Year	4%
Net Asset Value (NAV)	$1.00
Annualized Expense Ratio	0.06%
Standard & Poor's Rating	AAAm

Inventory Position

	Book Value	Market Value
Cash/Repo	3,074,223,613.09	3,074,223,613.09
US Treasuries	275,098,843.78	274,909,100.00
Agencies	2,947,419,723.36	2,948,317,174.04
Money Market Funds	452,049,679.32	452,049,679.32
Total Assets	*6,748,791,859.55*	*6,749,499,566.45*

Investment Distribution

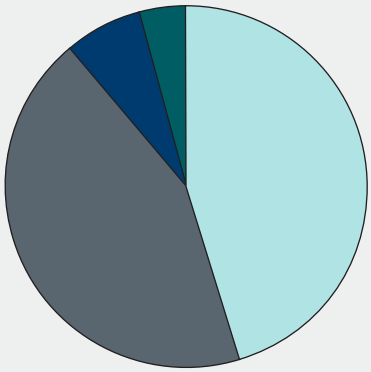

Cash/Repo	45%
Agencies	44%
Money Market	7%
Treasuries	4%

(a) The return information represents the average annualized rate of return on investments for the time period referenced. Return rates reflect a partial waiver of the Lone Star Investment Pool operating expense. Past performance is no guarantee of future results.

Lone★Star
Investment Pool

Corporate Overnight Fund

Return Information
March 31, 2023

Average Monthly Return (a)	4.84%
SEC 7-day Fund Yield (b)	4.99%
Weighted Average Maturity One (c)	22 days
Weighted Average Maturity Two (c)	62 days
Portfolio Maturing beyond One Year	0%
Net Asset Value (NAV)	$1.00
Annualized Expense Ratio	0.06%
Standard & Poor's Rating	AAAm

Inventory Position

	Book Value	Market Value
Cash/Repo	336,087,906.81	336,087,906.81
US Treasuries	-	-
Agencies	80,955,222.77	81,016,600.00
Commercial Paper	3,437,149,115.91	3,436,647,720.93
Money Market Funds	440,056,036.10	440,053,537.34
Total Assets	*4,294,248,281.59*	4,293,805,765.08

Investment Distribution

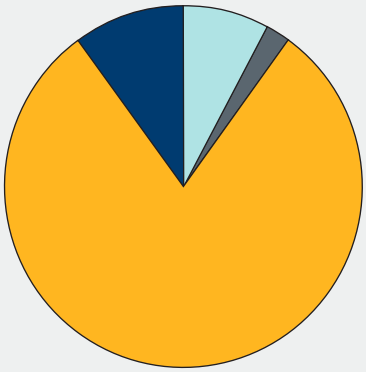

Commercial Paper	80%
Money Market	10%
Cash/Repo	8%
Agencies	2%

(b)

SEC 7-Day Yield Calculation

$$\text{Yield} = 2\left[\left[\frac{a-b}{cd}+1\right]^{6}-1\right]$$

a - Dividend and interest income
b - Expenses accrued for the period
c - Average daily number of shares outstanding during the period that was entitled to dividends
d - Maximum offering price per share on the last day of the period

Lone★Star
Investment Pool

Corporate Overnight Plus Fund

Return Information
March 31, 2023

Average Monthly Return (a)	4.85%
SEC 7-day Fund Yield (b)	5.01%
Weighted Average Maturity One (c)	25 days
Weighted Average Maturity Two (c)	68 days
Portfolio Maturing beyond One Year	0%
Net Asset Value (NAV)	$1.00
Annualized Expense Ratio	0.06%
Standard & Poor's Rating	AAAf/S1+

Inventory Position

	Book Value	Market Value
Cash/Repo	144,791,664.22	144,791,664.22
US Treasuries	-	-
Agencies	108,279,643.05	108,370,040.00
Commercial Paper	10,329,552,175.22	10,328,035,424.51
Money Market Funds	494,882,530.49	494,882,018.75
Total Assets	*11,077,506,012.98*	11,076,079,147.48

Investment Distribution

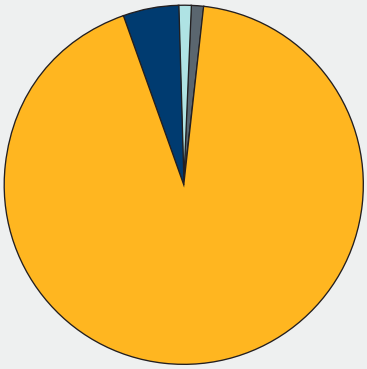

Commercial Paper	93%
Money Market	5%
Cash/Repo	1%
Agencies	1%

(c) The Weighted Average Maturity One calculation uses the industry standard definition of state maturity for floating rate instruments, the number of days until the next reset date. The Weighted Average Maturity Two calculation uses the final maturity of any floating rate instruments, as opined in Texas Attorney General Opinion No. JC0359.

Texas CLASS

	Texas CLASS	
Date	Dividend Rate	Daily Yield
03/01/2023	0.000131611	4.8038%
03/02/2023	0.000131775	4.8101%
03/03/2023	0.000395598	4.8131%
03/04/2023	0.000000000	4.8131%
03/05/2023	0.000000000	4.8131%
03/06/2023	0.000132221	4.8268%
03/07/2023	0.000132283	4.8283%
03/08/2023	0.000132130	4.8228%
03/09/2023	0.000132358	4.8311%
03/10/2023	0.000397203	4.8326%
03/11/2023	0.000000000	4.8326%
03/12/2023	0.000000000	4.8326%
03/13/2023	0.000132356	4.8310%
03/14/2023	0.000132197	4.8252%
03/15/2023	0.000132092	4.8214%
03/16/2023	0.000132320	4.8297%
03/17/2023	0.000396651	4.8256%
03/18/2023	0.000000000	4.8259%
03/19/2023	0.000000000	4.8259%
03/20/2023	0.000131972	4.8170%
03/21/2023	0.000131970	4.8169%
03/22/2023	0.000132165	4.8240%
03/23/2023	0.000133025	4.8551%
03/24/2023	0.000405045	4.9281%
03/25/2023	0.000000000	4.9281%
03/26/2023	0.000000000	4.9281%
03/27/2023	0.000135675	4.9521%
03/28/2023	0.000136155	4.9697%
03/29/2023	0.000136488	4.9818%
03/30/2023	0.000136964	4.9992%
03/31/2023	0.000137143	5.0057%

Performance results are shown net of all fees and expenses and reflect the reinvestment of dividends and other earnings. Many factors affect performance including changes in market conditions and interest rates and in response to other economic, political, or financial developments. Investment involves risk including the possible loss of principal. No assurance can be given that the performance objectives of a given strategy will be achieved. **Past performance is no guarantee of future results. Any financial and/or investment decision may incur losses.**

San Elizario ISD
P.O. Box 920
San Elizario, TX 79849
Phone 915.872.3900
Fax 915.872.3903

MEMORANDUM

To: Members of the Board of Trustees
From: Norberto Rivas, Chief Financial Officer
Subject: Budget Amendment
Date: May 10, 2023

HISTORY: The District's 2022-2023 budget was officially approved at the June 20, 2022 special Board meeting.

RATIONALE: In accordance with CE(LOCAL), the Board shall approve amendments to the budget when a change is made increasing any one of the functional spending categories or increasing revenue object accounts and other resources.

Budgeting funds will allow the projects to proceed, but the expenditures will be recorded based on when the they are incurred and any projects in progress as of the fiscal year end date of June 30th will need to be re-budgeted for the unspent balance in the new fiscal year beginning July 1st.

Additional projects are being quoted and will be presented during the budget workshop meetings.

***A purchase order is included on the agenda for approval and is contingent on the amendment.*

The purpose of this agenda item is to amend both budgeted revenues and expenditures in the following various areas:

- Revenue Object Code 5900 – Federal Programs
  - A major portion of the federal program revenues earned under the general fund are for indirect costs charged to federal grants such as the Title I and ESSER grants. Indirect costs are charged and earned as expenditures are incurred, paid and reported for these federal grants with. Indirect costs for the year as of the quarter ending March of 2023 are currently $251,000 over those currently budgeted; therefore, an amendment is being presented to increase revenues by $600,000.
- Expenditure Function 21 – Instructional Leadership
  - An increase of $45,000 to account for the new Director of Administrative Services position for the remainder of the 2022-23 fiscal year.
- Expenditure Function 36 – Cocurricular/Extracurricular Activities
  - An increase of $150,000 to purchase additional supplies and equipment for athletic sports based on the need assessment lists received.

San Elizario ISD
P.O. Box 920
San Elizario, TX 79849
Phone 915.872.3900
Fax 915.872.3903

- Expenditure Function 51 – Facilities Maintenance and Operations
    - A increase of $405,000 for the following projects:
        - $54,525** for a new fence for the HS baseball field with a sheet metal panel outfield
            - $13,132 had been previously budgeted based on quotes generated in December for fence repairs prior to the windstorm that occurred in February. After inspecting the damage from the windstorm, it was noted that a 4 ft fence was welded atop of the existing 4 ft fence which did not sustain during the high winds. A quote for $26,441 was subsequently obtained to replace the existing fence with a new 8 ft. fence. A different recommendation was then made in March to request a quote for a fence with a sheet metal panel outfield which would be much more durable and would match existing facilities within the area. That is the $54,525 quote and purchase order that is being recommended for approval.
        - $41,957** for a new sheet metal panel fence for the HS softball field
            - This would match the boy's baseball fence.
        - $55,213** for a towable boom lift for the maintenance department which would allow staff to reach higher areas for maintenance and renovation work orders to include painting of district facilities. This item is slated to be in stock in quarter 4 of 2024.
        - $18,275 for a cover and storage rack for the main HS gym to help protect and preserve the wooden flooring.
        - $2,355 to install human trafficking signage throughout the district to be in compliance with the TEA mandate.
        - $232,675 for the following projects still pending to be quoted:
            - Installation of exhaust fans for the cosmetology lab to alleviate the chemical smell when working with nail supplies
            - Installation of vents for the art lab to be able to offer kiln art
            - Installation of fall ball netting system to both the HS baseball and softball fields
            - To renovate adjoining classrooms into a bigger classroom area for band music programs at Alarcon and Borrego by removing the adjoining wall
            - To renovate the existing band room at the middle school
            - To renovate and repair the existing trainer's room by the main gym

San Elizario ISD
P.O. Box 920
San Elizario, TX 79849
Phone 915.872.3900
Fax 915.872.3903

- Expenditure Function 53 – Data Processing Services
  - An increase of $118,692 for RFP#23-1127 which was approved at the February 8, 2023 meeting and it included the special construction cost of $1,186,921 for a dedicated wide-area network of which the District would be responsible for 10% of those special construction costs.
- Expenditure Function 53 – Data Processing Services
  - A decrease of $44,000 for the projects listed below.
    - RFP#23-1128 was also approved at the February 8, 2023 meeting for the purchase of network equipment at a cost of $505,856 of which the District would be responsible for 15% of those costs, or $75,878, which is currently budgeted. Since that equipment will not arrive by June 30th, it is recommended to repurpose those funds for additional projects that can be incurred during this fiscal year and then re-budget the 15% cost in the new year as opposed to waiting until the new year for the 15% cost and then to the subsequent year for these additional projects.
      - Replacement kiosks for the school check in system $24,000
      - Updating the Board room with desk monitors and a wall monitor $5,000
      - A PA system for the Excel building $15,000
      - A new server for the telephone system (the cost remains in function 53)
- Expenditure Function 23 – School Leadership
  - An increase of $24,000 to purchase replacement kiosks for the school check in system.
- Expenditure Function 41 – General Administration
  - An increase of $5,000 to purchase 10 LED 16in monitors, a 55 in LED monitors, accessories and installation to update the video capabilities in the Board room
- Expenditure Function 51 – Facilities Maintenance and Operations
  - An increase of $15,000 to install a PA system at the Excel building.

BUDGET IMPACT: The budget impact for these amendments can be seen on the attachment.

ADMINISTRATIVE RECOMMENDATION: The administrative recommendation is to approve the budget amendment as presented.

Please check one: ☒ For approval ☐ Report / Information only ☐ Recognition only

SAN ELIZARIO INDEPENDENT SCHOOL DISTRICT - GENERAL FUND

		2022-2023 Fund 101	2022-2023 Fund 199	2022-2023 Adopted	2022-2023 Amended *Current*	**5/10/2023** Various Items	2022-2023 Amended *Proposed*
	REVENUES						
5700	Total Local and Intermediate Sources	$ 176,000	$ 3,287,733	$ 3,463,733	$ 3,813,733		$ 3,813,733
5800	State Sources	$ 77,000	$ 30,642,267	$ 30,719,267	$ 30,719,267		$ 30,719,267
5900	Federal Programs	$ 4,158,882	$ 2,020,000	$ 6,178,882	$ 6,428,882	$ 600,000	$ 7,028,882
	Total Revenues	$ 4,411,882	$ 35,950,000	$ 40,361,882	$ 40,961,882		$ 41,561,882
	EXPENDITURES						
11	Instruction	$ -	$ 18,841,137	18,841,137	$ 18,795,361		$ 18,795,361
12	Instructional Resources and Media Services	$ -	$ 397,879	397,879	$ 102,879		$ 102,879
13	Curriculum and Instructional Staff Development	$ -	$ 217,512	217,512	$ 240,512		$ 240,512
21	Instructional Leadership	$ -	$ 807,052	807,052	$ 807,052	$ 45,000	$ 852,052
23	School Leadership	$ -	$ 2,273,514	2,273,514	$ 2,250,514	$ 24,000	$ 2,274,514
31	Guidance, Counseling and Evaluation Services	$ -	$ 1,350,300	1,350,300	$ 1,263,300		$ 1,263,300
32	Social Work Services	$ -	$ 204,238	204,238	$ 54,238		$ 54,238
33	Health Services	$ -	$ 423,014	423,014	$ 440,014		$ 440,014
34	Student (Pupil) Transportation	$ -	$ 1,435,155	1,435,155	$ 1,689,855		$ 1,689,855
35	Food Services	$ 4,411,882	$ -	4,411,882	$ 4,411,882		$ 4,411,882
36	Cocurricular/Extracurricular Activities	$ -	$ 1,265,633	1,265,633	$ 1,250,633	$ 150,000	$ 1,400,633
41	General Administration	$ -	$ 1,746,111	1,746,111	$ 1,770,111	$ 5,000	$ 1,775,111
51	Facilities Maintenance and Operations	$ -	$ 4,566,073	4,566,073	$ 5,187,849	$ 420,000	$ 5,607,849
52	Security and Monitoring Services	$ -	$ 917,760	917,760	$ 982,760		$ 982,760
53	Data Processing Services	$ -	$ 1,271,777	1,271,777	$ 1,283,777	$ 74,692	$ 1,358,469
61	Community Services	$ -	$ 34,090	34,090	$ 34,090		$ 34,090
71	Debt Service - Principal on Long Term Debt	$ -	$ 95,000	95,000	$ 95,000		$ 95,000
81	Facilities Acquisition and Construction	$ -	$ 492,331	492,331	$ 569,331		$ 569,331
99	Other Intergovernmental Charges	$ -	$ 44,500	44,500	$ 44,500		$ 44,500
	Total Expenditures	$ 4,411,882	$ 36,383,076	$ 40,794,958	$ 41,273,658	$ 718,692	$ 41,992,350
	REVENUES OVER(UNDER) EXPENDITURES	$ -	$ (433,076)	$ (433,076)	$ (311,776)		$ (430,468)
7915	Operating Transfer In			$ -	$ -		$ -
7912	Sale of Real and Personal Property			$ 50,000	$ 50,000		$ 50,000
8911	Operating Transfer Out			$ -	$ -		$ -
	Total Other Financing Sources(Uses)			$ 50,000	$ 50,000		$ 50,000
	Net Change in Fund Balance			$ (383,076)	$ (261,776)		$ (380,468)
3000	Total Fund Balance - July 1 (Beginning)			$ 16,175,027	$ 16,175,027		$ 16,175,027
3000	Total Fund Balance - June 30 (Projected Ending)			$ 15,791,951	$ 15,913,251		$ 15,794,559

San Elizario ISD
P.O. Box 920
San Elizario, TX 79849
Phone 915.872.3900
Fax 915.872.3903

MEMORANDUM

To: Members of the Board of Trustees
From: Agueda Reyes, Child Nutrition Services Director
Subject: Approval of Purchase Order Revision
Date: May 10, 2023

HISTORY: The original purchase order for Segovia's was approved in the amount of $60,000 for the 2022-2023 school year.

RATIONALE: Produce is a required component for lunch and supper meal services. Increasing the purchase order by $5,000 is needed to cover purchases through the end of June 2023.

BUDGET: The additional funds needed are available within the Child Nutrition Services budget accounts.

ADMINISTRATIVE RECOMMENDATION:

The Administration is looking for the Board to approve the purchase order increase of $5,000 for Segovia's Produce.

Please check one: ☒ For approval ☐ Report / Information only ☐ Recognition only

PURCHASE ORDER REVISION REQUEST FORM

Vendor Name: Segovia's Produce Campus/Dept. Child Nutrition Services

Purchase Order # 60,000

- [x] Price Adjustment
- [ ] Add New Line Item
- [ ] Close/Void Purchase Order
- [ ] Delete Line Item
- [ ] Other

Reason for Revision **(Please include support backup):**

P.O. for Segovia's Produce will need to be increased by $5,000 to cover the May & June produce expenses.

Total Amount of Original PO: $ 60,000

Adjusted Cost: $ 5,000

New PO Total Amount: $ 65,000

Account #_____

Director/Principal Approval Signature	Date
Processed By (Finance Dept.) Signature	**Date**

PO Revisions for price adjustments are only required when changes are over $100.00dls.

Revised 1-5-21

San Elizario ISD
P.O. Box 920
San Elizario, TX 79849
Phone 915.872.3900
Fax 915.872.3903

MEMORANDUM

To: Members of the Board of Trustees
From: Agueda Reyes, Child Nutrition Services Director
Subject: Approval of Purchase Order Revision
Date: May 10, 2023

HISTORY: The original purchase order for GH Dairy was approved in the amount of $150,000 for the 2022-2023 school year.

RATIONALE: Milk is a required component for lunch and supper meal services. Increasing the purchase order by $5,000 is needed to cover purchases through the end of June 2023.

BUDGET: The additional funds needed are available within the Child Nutrition Services budget accounts.

ADMINISTRATIVE RECOMMENDATION:

The Administration is looking for the Board to approve the purchase order increase of $5,000 for GH Dairy.

Please check one: ☒ For approval ☐ Report / Information only ☐ Recognition only

PURCHASE ORDER REVISION REQUEST FORM

Vendor Name: GH Dairy Campus/Dept. Child Nutrition Services

Purchase Order # 45093

- [x] Price Adjustment
- [ ] Add New Line Item
- [ ] Close/Void Purchase Order
- [ ] Delete Line Item
- [ ] Other

Reason for Revision **(Please include support backup):**

P.O. for GH Dairy will need to be increased by $5,000 to cover the May & June milk expenses.

Total Amount of Original PO: $ 150,000

Adjusted Cost: $ 5,000

New PO Total Amount: $ 155,000

Account #

Director/Principal Approval Signature	Date
[signature]	5-1-23
Processed By (Finance Dept.) Signature	**Date**

PO Revisions for price adjustments are only required when changes are over $100.00dls.

San Elizario ISD
P.O. Box 920
San Elizario, TX 79849
Phone 915.872.3900
Fax 915.872.3903

MEMORANDUM

To: Members of the Board of Trustees
From: Jesus Martinez, Director of Support Services
Subject: PO #45094 – Heist Disposal Service, Inc.
Date: May 10, 2023

HISTORY: The original purchase order for Heist Disposal Service, Inc. was approved for $34,830. We have requested extra trash pick-ups district-wide due to increased cafeteria disposable plates (COVID-19 mitigation measure) and other trash disposal needs such as grounds trash removal district wide. We need to increase the PO to $37,430. This new revised amount requires Board approval.

RATIONALE: The revision approval of this purchase order is requested to cover costs for the remainder of the school year.

BUDGET: The additional funds needed are available within the support services maintenance accounts.

ADMINISTRATIVE RECOMMENDATION: It is recommended that the purchase order revision be approved to cover the costs for the remaining of the 2022-2023 school year.

Please check one: ☒ For approval ☐ Report / Information only ☐ Recognition only
☐ Attachment Included

PURCHASE ORDER REVISION REQUEST FORM

Vendor Name: Heist Campus/Dept Support Services

Purchase Order # 45094

- [x] Price Adjustment
- [ ] Add New Line Item
- [ ] Close/Void Purchase Order
- [ ] Delete Line Item
- [ ] Other

Reason for Revision (Please include support backup):

Please adjust PO to covered additional services (pick-up) needed for remainder of school year.

Total Amount of Original PO: $ 34830.00

Adjusted Cost: $ 2600.00

New PO Total Amount: $ 37430.00

Rev #1

Account # 199.51.6259.02.8400.99

Director/Principal Approval Signature	Date
	4-21-2023
Processed By (Finance Dept.) Signature	**Date**

PO Revisions for price adjustments are only required when changes are over $100.00dls.

Revised 1-5-21

San Elizario Independent School District
1050 Chicken Ranch Road
San Elizario, TX 79849-9999
(915) 872-3900

BLANKET/PROJECT PURCHASE
45094

Date: 06/14/2022

VENDOR: 5905

TO: Heist Disposal Service Inc
P.O. Box 370335
El Paso, TX 79937-0335

SHIP TO: San Elizario Independent School
200 N. Herring
San Elizario, TX 79849-

ATTN:
VENDOR PHONE: 915-594-3610
VENDOR FAX:
VENDOR EMAIL:

REC. LOC: Support Services - S. Renteria
REC. GRP: Support Services - S. Renteria

LINE	ITEM	QUANTITY	UOM	ITEM NO.	UNIT PRICE	UNIT DISC.	TOTAL
1		1.00000			34830.00		34830.00

1- BLANKET PO to cover 2022 - 2023

DISTRICT / Waste Disposal Pick Up

Not to exceed $34,830

****
ESC Region 19 ASC - 22-7441

TOTAL 34830.00

P.O. Source	Account Number	Amount
Project Requisition	199.51.6259.02.860.99	34,830

INSTRUCTIONS TO VENDORS

1. Reference all packages & packing slips with PO Number
2. Ship prepaid
3. Tax Exempt No. 74 6002231
4. Invoice in duplicate; Attn: Accounts Payable
5. Do not fill order at higher price without Purchasing Dept. approval
6. POs are cancelled if not shipped complete within 90 days.
7. If federal funds (funds starting with a 2 from the first three-digit code in the account number) have been referenced on this PO, these items will need to follow the Federal Regulation 2 CFR 200.322, The Domestic Preferences for Procurements (commonly referenced as Buy American).

THIS PURCHASE ORDER IS NOT BINDING UNLESS SIGNED BY A PURCHASING AGENT.

Norberto Rivas

San Elizario ISD
P.O. Box 920
San Elizario, TX 79849
Phone 915.872.3900
Fax 915.872.3903

MEMORANDUM

To: Members of the Board of Trustees
From: Agueda Reyes, Child Nutrition Services Director
Subject: Approval of Purchase Order Revision
Date: May 10, 2023

HISTORY: The original purchase order for Trejo Commercial Refrigeration was approved in the amount of $50,000 for regular maintenance and repair of cafeteria kitchen equipment.

RATIONALE: Installation costs for the new equipment received were not part of the initial purchase order. New equipment that will be installed includes two braising pans and exhaust hood for Lorenzo Alarcon and a mixer and combi oven for Josefa Sambrano. Mr. Trejo has assessed and recommended the replacement of the walk-in refrigerator floor at Lorenzo Loya and Alfonso Borrego. Points were lost in the last Health Inspection at Alfonso Borrego due to the floor. Increase is also to cover the money originally budgeted for summer maintenance.

BUDGET: The additional funds needed are available within the Child Nutrition Services budget accounts.

ADMINISTRATIVE RECOMMENDATION:

The Administration is looking for the Board to approve the purchase order increase of $15,000 for Trejo Commercial Refrigeration.

Please check one: ☒ For approval ☐ Report / Information only ☐ Recognition only

PURCHASE ORDER REVISION REQUEST FORM

Vendor Name: Trejo Commercial Refrigeration Campus/Dept. Child Nutrition Services

Purchase Order # 45095

[X] Price Adjustment [ ] Add New Line Item [ ] Close/Void Purchase Order

[ ] Delete Line Item [ ] Other

Reason for Revision **(Please include support backup):**

P.O. for Trejo Commercial Refrigeration will need to be increased by $15,000 to cover the installation of two new braising pans, exhaust hood, mixer, and oven. Also, for installation of new floor in walk in refrigerator units at Lorenzo Loya & Alfonso Borrego.

Increase is also to cover the money originally budgeted for summer maintenance.

Total Amount of Original PO: $ 50,000

Adjusted Cost: $ 15,000

New PO Total Amount: $ 65,000

Account #

Director/Principal Approval Signature	Date
	5-1-23
Processed By (Finance Dept.) Signature	**Date**

PO Revisions for price adjustments are only required when changes are over $100.00dls.

San Elizario ISD
P.O. Box 920
San Elizario, TX 79849
Phone 915.872.3900
Fax 915.872.3903

MEMORANDUM

To: Members of the Board of Trustees
From: Norberto Rivas, Chief Financial Officer
Jesus Martinez, Director of Support Services
Subject: Purchase Order #47996-AREDi Enterprises, LLC.
Date: May 10, 2023

HISTORY: During the special Board meeting held on Monday April 17, 2023, certain improvements and renovations to the district park (Fernie Madrid Eagle Park) across from Alarcon Elementary on Socorro Rd., were approved.

RATIONALE: The construction of a smaller scale replica of the Pathway of Champions centerpiece structure will be built in honor of Mr. Fernie Madrid. This is one of the items that was Board approved and is part of the improvements and renovations to the newly named Fernie Madrid Eagle Park. We selected a vendor that is part of the YISD/CTPA Purchasing Cooperative #223000RFP.

BUDGET: The funds to cover this work have been allocated under the 199-account budget.

ADMINISTRATIVE RECOMMENDATION: The administrative recommendation is to approve the purchase order for AREDi Enterprises, LLC.

Please check one: ☒ For approval ☐ Report / Information only ☐ Recognition only
☒ Attachment Included

San Elizario Independent School District

1050 Chicken Ranch Road
San Elizario, TX 79849-9999
(915) 872-3900

BLANKET/PROJECT PURCHASE
47996

Date: 04/27/2023

VENDOR: 10791

TO: AREDI Enterprises
1002 West Missouri
EL PASO, TX 79902

SHIP TO: San Elizario Independent School
200 N. Herring Rd
San Elizario, TX 79849-

ATTN:
VENDOR PHONE: 915-346-1181
VENDOR FAX:
VENDOR EMAIL:

REC. LOC: Support Services - S. Renteria
REC. GRP: Support Services - S. Renteria

LINE	ITEM QUANTITY	UOM	ITEM NO.	UNIT PRICE	UNIT DISC.	TOTAL
1	1.00000			42262.25		42262.25

(1) Construction of Monument to include all materials and labor @ $42,262.25

Ysleta ISD / CTPA# 223000RFP
Monument for FM Dedication
Alarcon Park

TOTAL 42262.25

P.O. Source	Account Number	Amount
Project Requisition	199.81.6619.23.862.99	42,262.25

PO NOT VALID UNLESS APPROVED BY THE SAN ELIZARIO ISD BOARD

INSTRUCTIONS TO VENDORS

1. Reference all packages & packing slips with PO Number
2. Ship prepaid
3. Tax Exempt No. 74 6002231
4. Invoice in duplicate; Attn: Accounts Payable
5. Do not fill order at higher price without Purchasing Dept. approval
6. POs are cancelled if not shipped complete within 90 days.
7. If federal funds (funds starting with a 2 from the first three-digit code in the account number) have been referenced on this PO, these items will need to follow the Federal Regulation 2 CFR 200.322, The Domestic Preferences for Procurements (commonly referenced as Buy American).

THIS PURCHASE ORDER IS NOT BINDING UNLESS SIGNED BY A PURCHASING AGENT.

Norberto Pinas

AREDí
Enterprises, LLC
Construction & Facilities Maintenance

1002 West Missouri
El Paso TX. 79902

April 25, 2023

San Elizario Independent School District
Socorro Rd,
El Paso, TX 79907

Subject: SEISD Construction of Monument

Dear Mr. Jesus Martínez:

AREDí Enterprises, LLC is pleased to provide you our proposal inclusive of all materials, labor, equipment and supervision needed to construct a monument park area of approximately 16' x 14'. The seat wall (benches) and raised stone bed will be constructed using CMU block, concrete and rebar reinforcements. Concrete floor will be stamped and color will be chosen by San Elizario ISD. The seat wall will be 6'x 4' and will take a 1x1 footing and the raised stone bed will have a 1x1 footing with a diameter of approximately 55" end to end. The new structure will be made to resemble the monument located at San Elizario High School. All seat walls and monument stone bed will be finished with a Stone Veneer (chosen by the district) and will have a 4" colored cap. This pricing is offered in reference to YISD District Repair Projects of Limited Scope Contract No. 223000RFP and good for 60 days from the date of this letter. Bond requirement included.

Total Amount: $42,262.25 (Forty Two-Thousand Two Hundred Sixty Two Dollars & 25 Cents)

We look forward to providing safe, responsive, quality services to San Elizario ISD. Please do not hesitate to call me at (915) 346-1181 if you have any questions or concerns.

Sincerely,

Rebeca Arellano-Díaz
Owner
(915) 346-1181

Exclusions: Permits, Sales Tax, Delays by Phase Interruptions, Cleanup After Other Contractors or Any Other Scope of Work Not Listed in This Proposal

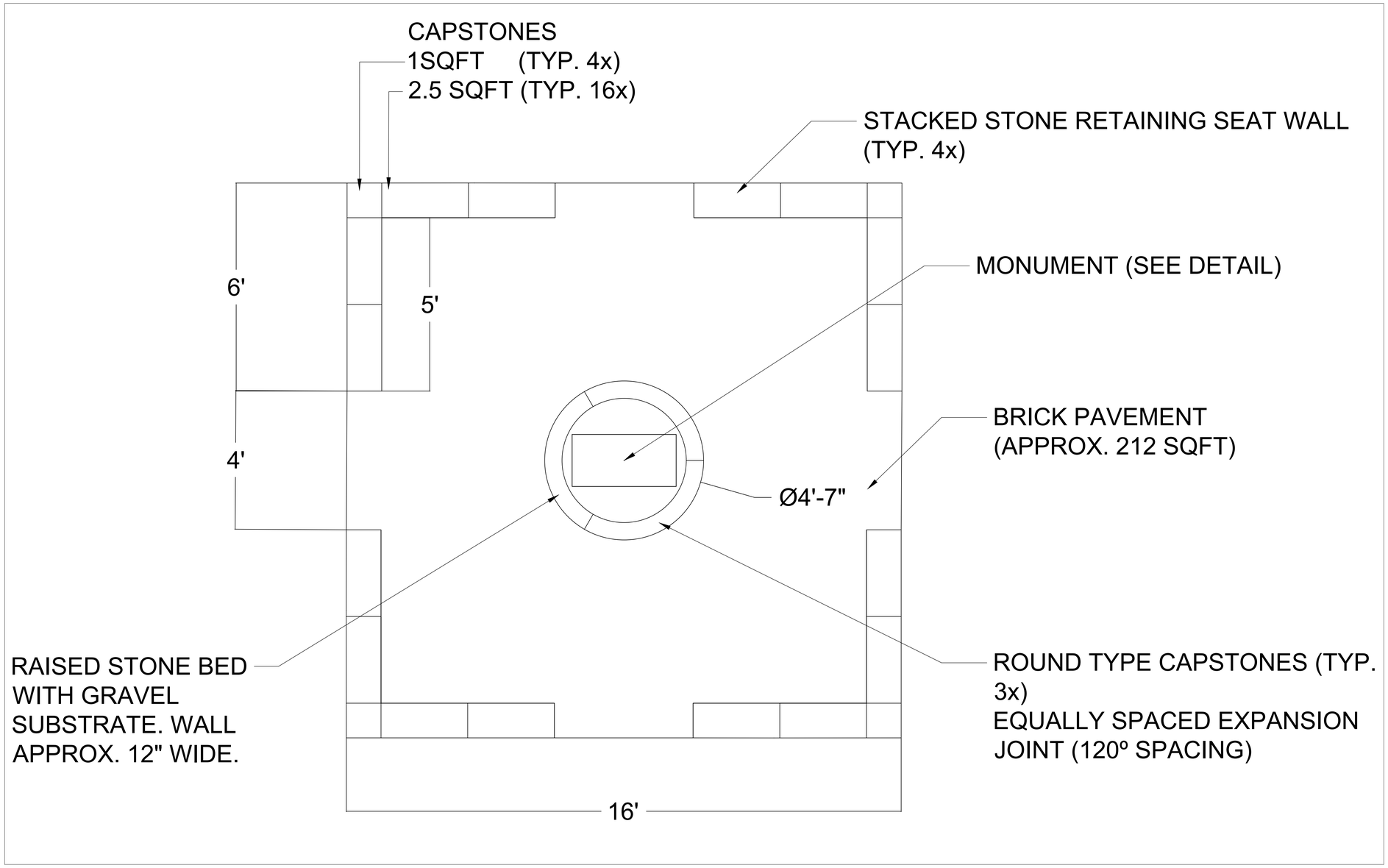

1
SP-100

SAN ELI MONUMENT GROUNDS TOP VIEW

SCALE: 3/16" = 1'-0"

N

AREDi
Enterprises, LLC
Construction & Facilities Maintenance

THESE DOCUMENTS CONTAIN POTENTIALLY SENSITIVE INFORMATION AND SHALL BE USED FOR THEIR INTENDED PURPOSE. ONCE THE INTENDED PURPOSE HAS CEASED, THE DOCUMENTS SHALL BE DESTROYED IN A SECURE MANNER.

THE CONTENT IN THESE DOCUMENTS HAS NOT BEEN APPROVED BY A CERTIFIED PROFESSIONAL ARCHITECT/ENGINEER AND IS NOT AUTHORIZED FOR PROFESSIONAL USE, UNLESS REVIEWED AND APPROVED BY AN AUTHORIZED AND CERTIFIED PROFESSIONAL ARCHITECT/ENGINEER. THE DOCUMENTS ARE INTENDED FOR GENERAL MAPPING, MARK-UP, AND ANNOTATION FOR IN-HOUSE DOCUMENTATION ONLY.

CONTRACTORS AND CONSULTANTS

KEY PLAN

REVISIONS

REV. #	DESCRIPTION	DATE

CLIENT
SAN ELIZARIO INDEPENDANT SCHOOL DISTRICT
1050 CHICKEN RANCH RD.
P.O. BOX 920
SAN ELIZARIO, TEXAS, 79849

PROJECT TITLE
SEISD PLAZA MONUMENT CONSTRUCTION

DRAWING TITLE
PLAZA MONUMENT GENERAL SITE PLAN

PHASE
GENERAL DOCUMENTATION

DRAWN BY	CHECKED BY	DATE

PROJECT #

DRAWING #
SP-100

PAGE #
1 OF 2

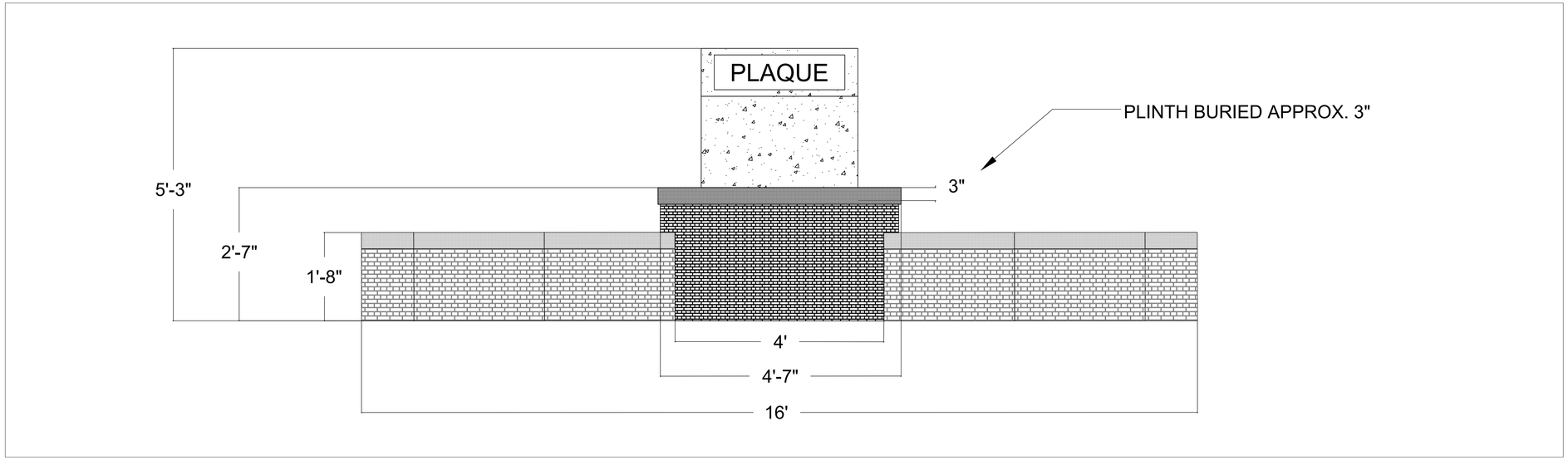

1 / SP-101 SAN ELI MONUMENT FRONT VIEW

SCALE: 1/4" = 1'-0"

N

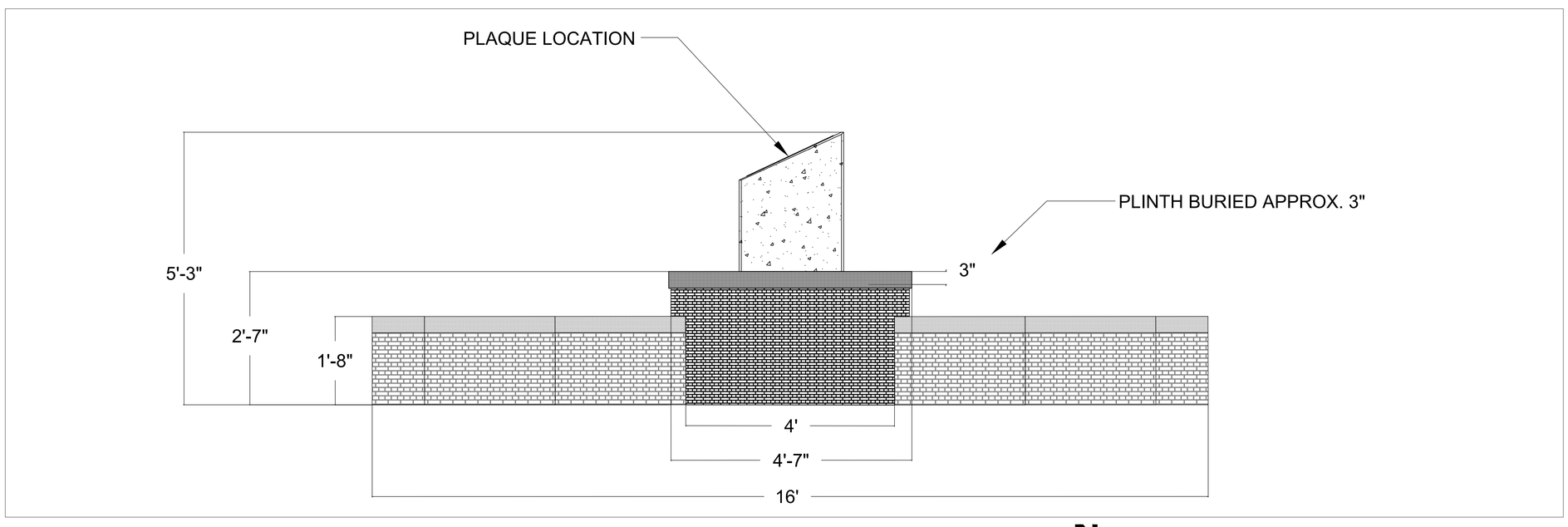

2 / SP-101 SAN ELI MONUMENT SIDE VIEW

SCALE: 1/4" = 1'-0"

N

AREDi Enterprises, LLC

Construction & Facilities Maintenance

THESE DOCUMENTS CONTAIN POTENTIALLY SENSITIVE INFORMATION AND SHALL BE USED FOR THEIR INTENDED PURPOSE. ONCE THE INTENDED PURPOSE HAS CEASED, THE DOCUMENTS SHALL BE DESTROYED IN A SECURE MANNER.

THE CONTENT IN THESE DOCUMENTS HAS NOT BEEN APPROVED BY A CERTIFIED PROFESSIONAL ARCHITECT/ENGINEER AND IS NOT AUTHORIZED FOR PROFESSIONAL USE, UNLESS REVIEWED AND APPROVED BY AN AUTHORIZED AND CERTIFIED PROFESSIONAL ARCHITECT/ENGINEER. THE DOCUMENTS ARE INTENDED FOR GENERAL MAPPING, MARK-UP, AND ANNOTATION FOR IN-HOUSE DOCUMENTATION ONLY.

CONTRACTORS AND CONSULTANTS

KEY PLAN

REVISIONS

REV. #	DESCRIPTION	DATE

CLIENT

SAN ELIZARIO INDEPENDANT SCHOOL DISTRICT
1050 CHICKEN RANCH RD.
P.O. BOX 920
SAN ELIZARIO, TEXAS, 79849

PROJECT TITLE

SEISD PLAZA MONUMENT CONSTRUCTION

DRAWING TITLE

PLAZA MONUMENT FRONT AND SIDE VIEWS

PHASE

GENERAL DOCUMENTATION

DRAWN BY	CHECKED BY	DATE

PROJECT #

DRAWING #

SP-101

PAGE #

1 OF 2

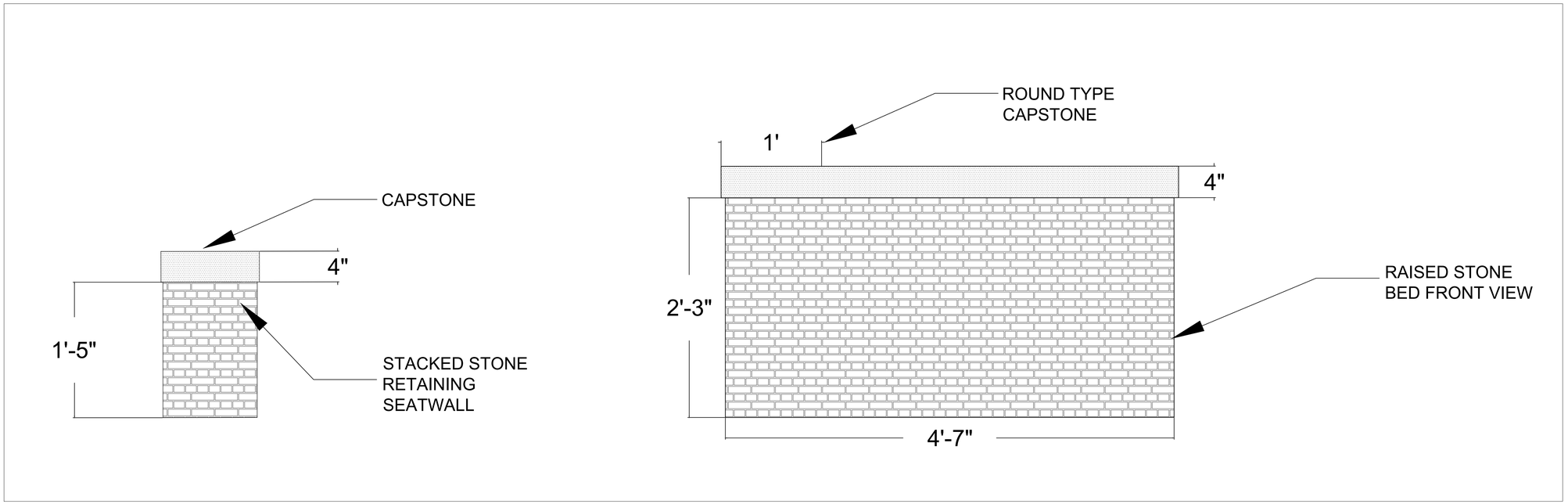

1 SP-501 SIDE VIEW OF SEATWALL AND STONE BED

SCALE: 1/2" = 1'-0"

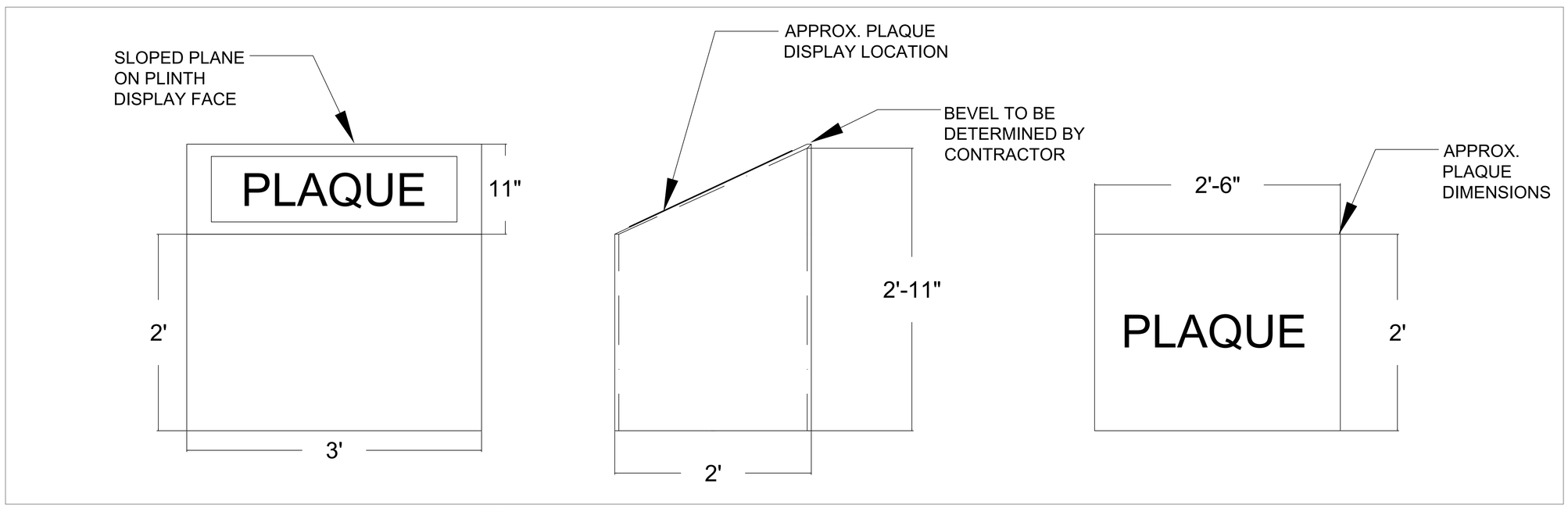

2 SP-501 MONUMENT PLINTH AND PLAQUE

SCALE: 1/2" = 1'-0"

AREDi
Enterprises, LLC
Construction & Facilities Maintenance

THESE DOCUMENTS CONTAIN POTENTIALLY SENSITIVE INFORMATION AND SHALL BE USED FOR THEIR INTENDED PURPOSE. ONCE THE INTENDED PURPOSE HAS CEASED, THE DOCUMENTS SHALL BE DESTROYED IN A SECURE MANNER.

THE CONTENT IN THESE DOCUMENTS HAS NOT BEEN APPROVED BY A CERTIFIED PROFESSIONAL ARCHITECT/ENGINEER AND IS NOT AUTHORIZED FOR PROFESSIONAL USE, UNLESS REVIEWED AND APPROVED BY AN AUTHORIZED AND CERTIFIED PROFESSIONAL ARCHITECT/ENGINEER. THE DOCUMENTS ARE INTENDED FOR GENERAL MAPPING, MARK-UP, AND ANNOTATION FOR IN-HOUSE DOCUMENTATION ONLY.

CONTRACTORS AND CONSULTANTS

KEY PLAN

REVISIONS

REV. #	DESCRIPTION	DATE

CLIENT

SAN ELIZARIO INDEPENDANT
SCHOOL DISTRICT
1050 CHICKEN RANCH RD.
P.O. BOX 920
SAN ELIZARIO, TEXAS, 79849

PROJECT TITLE

SEISD PLAZA MONUMENT CONSTRUCTION

DRAWING TITLE

MONUMENT DETAILS

PHASE

GENERAL DOCUMENTATION

DRAWN BY	CHECKED BY	DATE

PROJECT #

DRAWING #

SP-501

PAGE #

2 OF 2

San Elizario ISD
P.O. Box 920
San Elizario, TX 79849
Phone 915.872.3900
Fax 915.872.3903

MEMORANDUM

To: Members of the Board of Trustees
From: Norberto Rivas, Chief Financial Officer
Jesus Martinez, Director of Support Services
Subject: Purchase Order #47997-City Fence and Pipe Co. (for HS-SB Field)
Date: May 10, 2023

HISTORY: During the February 26, 2023, windstorm, the baseball outfield fence and windscreen were damaged. We reviewed replacement options that would provide best value for the district in the long run. In the process, replacing the softball outfield as well was identified. This way both the softball and baseball fields will be upgraded.

RATIONALE: In reviewing other options that would provide a better value in the long run to the district, instead of the current chain link fence, we requested a quote for the removal of the existing outfield chain link fence and the replacement of it with metal fencing (blue) with cap (yellow). We selected a vendor that is part of the Region 19 purchasing Co-Op RFP#21-7401. Vendors in the purchasing Co-Op have gone through the Co-Ops bidding process.

BUDGET: The funds to cover this work have been allocated under the 199-account budget.

ADMINISTRATIVE RECOMMENDATION: The administrative recommendation is to approve the purchase order for City Fence and Pipe Co.

Please check one: ☒ For approval ☐ Report / Information only ☐ Recognition only
☒ Attachment Included

San Elizario Independent School District

1050 Chicken Ranch Road
San Elizario, TX 79849-9999
(915) 872-3900

BLANKET/PROJECT PURCHASE
47997

Date: 04/28/2023

VENDOR: 2191

TO: City Fence & Pipe Co
10865 Dyer Street
EL PASO, TX 79934

SHIP TO: San Elizario Independent School
200 N. Herring Rd
San Elizario, TX 79849-

ATTN:
VENDOR PHONE: 915-821-8900
VENDOR FAX: 915-751-4537
VENDOR EMAIL:

REC. LOC: Support Services - S. Renteria
REC. GRP: Support Services - S. Renteria

LINE	ITEM QUANTITY	UOM	ITEM NO.	UNIT PRICE	UNIT DISC.	TOTAL
1	1.00000			41956.80		41956.80

(1) Installation of fence at High School Softball Outfield to include materials and labor @ $41,956.80

REGION 19 BID# 21-7401
High School

TOTAL 41956.80

P.O. Source	Account Number	Amount
Project Requisition	199.51.6249.82.001.99	41,956.8

PO NOT VALID UNLESS APPROVED BY THE SAN ELIZARIO ISD BOARD

INSTRUCTIONS TO VENDORS

1. Reference all packages & packing slips with PO Number
2. Ship prepaid
3. Tax Exempt No. 74 6002231
4. Invoice in duplicate; Attn: Accounts Payable
5. Do not fill order at higher price without Purchasing Dept. approval
6. POs are cancelled if not shipped complete within 90 days.
7. If federal funds (funds starting with a 2 from the first three-digit code in the account number) have been referenced on this PO, these items will need to follow the Federal Regulation 2 CFR 200.322, The Domestic Preferences for Procurements (commonly referenced as Buy American).

THIS PURCHASE ORDER IS NOT BINDING UNLESS SIGNED BY A PURCHASING AGENT.

Norberto Pinas

San Elizario ISD
P.O. Box 920
San Elizario, TX 79849
Phone 915.872.3900
Fax 915.872.3903

MEMORANDUM

To: Members of the Board of Trustees
From: Norberto Rivas, Chief Financial Officer
Jesus Martinez, Director of Support Services
Subject: Purchase Order #47998-City Fence and Pipe Co. (for HS-Baseball Field)
Date: May 10, 2023

HISTORY: During the February 26, 2023, windstorm, the baseball outfield fence and windscreen were damaged. The fence sustained considerable damage to the point it is best to replace the aging fence.

RATIONALE: In reviewing other options that would provide a better value in the long run to the district, instead of the current chain link fence, we requested a quote for the removal of the existing outfield chain link fence and the replacement of it with an eight-foot-high metal fence (blue) with cap (yellow). We selected a vendor that is part of the Region 19 purchasing Co-Op RFP#21-7401. Vendors in the purchasing Co-Op have gone through the Co-Ops bidding process.

BUDGET: The funds to cover this work have been allocated under the 199-account budget.

ADMINISTRATIVE RECOMMENDATION: The administrative recommendation is to approve the purchase order for City Fence and Pipe Co.

Please check one: ☒ For approval ☐ Report / Information only ☐ Recognition only
☒ Attachment Included

San Elizario Independent School District

1050 Chicken Ranch Road
San Elizario, TX 79849-9999
(915) 872-3900

BLANKET/PROJECT PURCHASE
47998

Date: 04/28/2023

VENDOR: 2191

TO: City Fence & Pipe Co
10865 Dyer Street
EL PASO, TX 79934

SHIP TO: San Elizario Independent School
200 N. Herring Rd
San Elizario, TX 79849-

ATTN:
VENDOR PHONE: 915-821-8900
VENDOR FAX: 915-751-4537
VENDOR EMAIL:

REC. LOC: Support Services - S. Renteria
REC. GRP: Support Services - S. Renteria

LINE	ITEM QUANTITY	UOM	ITEM NO.	UNIT PRICE	UNIT DISC.	TOTAL
1	1.00000			54525.00		54525.00

(1) Installation of fence at High School Baseball Outfield to include materials and installation @ $54.525.00

REGION 19 BID# 21-7401
High School

TOTAL 54525.00

P.O. Source	Account Number	Amount
Project Requisition	199.51.6249.82.001.99	54,525

PO NOT VALID UNLESS APPROVED BY THE SAN ELIZARIO ISD BOARD

INSTRUCTIONS TO VENDORS

1. Reference all packages & packing slips with PO Number
2. Ship prepaid
3. Tax Exempt No. 74 6002231
4. Invoice in duplicate; Attn: Accounts Payable
5. Do not fill order at higher price without Purchasing Dept. approval
6. POs are cancelled if not shipped complete within 90 days.
7. If federal funds (funds starting with a 2 from the first three-digit code in the account number) have been referenced on this PO, these items will need to follow the Federal Regulation 2 CFR 200.322, The Domestic Preferences for Procurements (commonly referenced as Buy American).

THIS PURCHASE ORDER IS NOT BINDING UNLESS SIGNED BY A PURCHASING AGENT.

Norberto Rivas

San Elizario ISD
P.O. Box 920
San Elizario, TX 79849
Phone 915.872.3900
Fax 915.872.3903

MEMORANDUM

To: Members of the Board of Trustees
From: Jesus Martinez, Director of Support Services
Norberto Rivas, Chief Financial Officer
Subject: Approval of PO #47999 – Frank's Supply Company, Inc.
Date: May 10, 2023

HISTORY: It is of the highest importance and part of our yearly district facilities improvement plans, to have well maintained district facilities. A well-maintained school building keeps students engaged in academics, resulting in greater information retention in the classroom. Teachers also benefit from school facilities management investments.

RATIONALE: We want to purchase a one 50' towable boom lift with an open bucket that can be easily and safely worked from and be easy to move from one district facility to another. The benefits of a towable boom lift are: better maneuverability to access inaccessible hard-to-reach places, extends much higher than scissor lifts, affordable solution to access height, excels in areas that might not support a heavy machine. Thus, allowing us to freshen our facility's exterior paint, replace and fix exterior lighting, replace and fix exterior surveillance equipment, efficiently and safely install A/C compressors, and help support any other future facilities improvement plans. This purchase will eliminate the cost of renting a boom lift. The weekly rental cost is $983, per week.

BUDGET: Total for one towable boom lift is $55,212.92.

ADMINISTRATIVE RECOMMENDATION: The recommendation is for the Board to approve the purchase of one 50' towable boom.

Please check one: ☒ For approval ☐ Report / Information only ☐ Recognition only
☒ Attachment Included

San Elizario Independent School District

1050 Chicken Ranch Road
San Elizario, TX 79849-9999
(915) 872-3900

PURCHASE ORDER NUMBER
47999

Date: 04/28/2023

VENDOR: 5617

TO: Frank's Supply Co Inc
1211 Barranca
El Paso, TX 79935

SHIP TO: San Elizario Independent School
200 N. Herring Rd
San Elizario, TX 79849-

ATTN:
VENDOR PHONE: 915-592-9700
VENDOR FAX: 915-592-3311
VENDOR EMAIL:

REC. LOC: Administration Annex
REC. GRP: Support Services - S. Renteria

LINE	ITEM QUANTITY	UOM	ITEM NO.	UNIT PRICE	UNIT DISC.	TOTAL
1	1.00000	EA	GNE TZ-50 DC 50' Towable Boom 2" Ball Bulldog Coupler	52000.00	0.00	52000.00
2	1.00000	EA	Frgt Freight REGION 19 BID# 22-7434 Support Services Please submit PO to Support Services	3212.92	0.00	3212.92

TOTAL 55212.92

P.O. Source	Account Number	Amount
Budget Requisition	199.51.6639.82.851.99	55,212.92

PO NOT VALID UNLESS APPROVED BY THE SAN ELIZARIO ISD BOARD

INSTRUCTIONS TO VENDORS

1. Reference all packages & packing slips with PO Number
2. Ship prepaid
3. Tax Exempt No. 74 6002231
4. Invoice in duplicate; Attn: Accounts Payable
5. Do not fill order at higher price without Purchasing Dept. approval
6. POs are cancelled if not shipped complete within 90 days.
7. If federal funds (funds starting with a 2 from the first three-digit code in the account number) have been referenced on this PO, these items will need to follow the Federal Regulation 2 CFR 200.322, The Domestic Preferences for Procurements (commonly referenced as Buy American).

THIS PURCHASE ORDER IS NOT BINDING UNLESS SIGNED BY A PURCHASING AGENT.

Norberto Pinas

San Elizario ISD
P.O. Box 920
San Elizario, TX 79849
Phone 915.872.3900
Fax 915.872.3903

MEMORANDUM

To: Members of the Board of Trustees
From: Norberto Rivas, Chief Financial Officer
Jesus Martinez, Director- Support Services
Subject: Consider and possible Board action to approve final payment to AREDi Enterprises, LLC., for Loya Playground Area Site Improvements PO#47396
Date: May 10, 2023

HISTORY: AREDi Enterprises LLC., has completed all construction work regarding the Loya playground area site improvements-removal of old playground equipment, construction of rock retaining walls and concrete sidewalk for both shaded playground areas.

RATIONALE: The purpose of this agenda item is to seek Board acceptance of the work and to approve the release of the remaining balance for the aforementioned project in accordance with CV (LOCAL).

BUDGET: The remaining amount of $1,505.22 which includes any retainage owed to the contractor, will be paid from the allocated funds that were committed for this project.

ADMINISTRATIVE RECOMMENDATION: The recommendation is for the Board of Trustees to approve the final payment as presented.

Please check one: ☒ For approval ☐ Report / Information only ☐ Recognition only
☒ Attachment Included

AREDI ENTERPRISES, LLC
1002 W Missouri Ave
TX 79902
(915) 9153461181
arediconstruction@gmail.com

AREDi
Enterprises, LLC
Construction & Facilities Maintenance

INVOICE

BILL TO
San Elizario ISD
1050 Chicken Ranch Road
San Elizario, TX 79849-999
El Paso

SHIP TO
San Elizario ISD
1050 Chicken Ranch Road
San Elizario, TX 79849-999
El Paso

INVOICE # 1268
DATE 04/20/2023
DUE DATE 05/20/2023
TERMS Net 30

DATE	ACTIVITY	DESCRIPTION	QTY	RATE	AMOUNT
04/14/2023	**Construction & Repairs**	5% REMAINDING BALANCE for Removal of Playground Equipment, Construction of Rockwall and Concrete Sidewalk	0.05	30,104.32	1,505.22

FOR PO# 47396

Net 30 Terms. All overdue invoices will be subject to a 10% late fee after every 30 days

SUBTOTAL	1,505.22
TAX	0.00
TOTAL	1,505.22
BALANCE DUE	**$1,505.22**

San Elizario ISD
P.O. Box 920
San Elizario, TX 79849
Phone 915.872.3900
Fax 915.872.3903

MEMORANDUM

To: Members of the Board of Trustees
From: Norberto Rivas, Chief Financial Officer
Subject: Consider and possible Board action to approve the first one-year extension with Aetna for Third Party Administration of Group Medical Health Benefits, Medical Provider Network, Pharmacy Benefit Management, Stop Loss Reinsurance, and COBRA Administration (RFP#20-1074) for the contract term of September 1, 2023 through August 31, 2024
Date: May 10, 2023

HISTORY: RFP#20-1074 was approved at the June 15, 2020 meeting and was for a three-year initial contract from September 1, 2020 through August 31, 2023 with the option to renew two additional one-year terms.

RATIONALE: The purpose of this agenda item is to recommend approval of the first one-year extension renewal for the contract term of September 1, 2023 through August 31, 2024.

Aetna is offering the same fees for the medical plan and the $10K fee credit is used to offset the cost for the Employee Assistance Program as noted in the exhibit below:

	Estimated Enrollment	Current	Year 4	Year 5	% Change
Guarantee Period Effective Date		September 01, 2022	September 01, 2023	September 01, 2024	
Fee Basis		Mature	Mature	Mature	
Medical Fees as Billed (PEPM)	**Estimated Enrollment**	**Current**	**Year 4**	**Year 5**	**% Change**
AWH Tenet ACO	226	$37.04	$37.04	$37.04	0.0%
Choice POSII	233	$37.04	$37.04	$37.04	0.0%
Plan Year Service Fees	**459**	**$204,016**	**$204,016**	**$204,016**	**0.0%**
Service Fee Summary (Plan Year)		**Current**	**Year 4**	**Year 5**	**% Change**
Administrative Service Fees		$204,016	$204,016	$204,016	0.0%
Service Fee Guarantee % Change†				**0.0%**	
Fee Credit††		($10,000)	($10,000)	($10,000)	
Total Fees (incl Discounts, Credits, Broker Comp, Other Chrgs)		**$194,016**	**$194,016**	**$194,016**	**0.0%**

Clarifications

- PEPM is defined as Per Employee Per Month
- Please see Programs & Services for additional information. Some services may come at additional cost to the fees shown above.
- Broker Compensation, if applicable, is subject to customer approval.
- Any Plan Year costs are based on the Estimated Enrollment and subject to change based on actual enrollment.

San Elizario ISD
P.O. Box 920
San Elizario, TX 79849
Phone 915.872.3900
Fax 915.872.3903

Aetna is also continuing to offer an annual allowance which is used to incentivize plan members to attend annual physical office visits and to offer wellness merchandise to plan members:

Allowances - Self-Funded **Effective Date: September 01, 2023**

We are including allowance(s) for your Aetna plans applicable to each year of the Guarantee Period as outlined in the chart below. Allowance dollars are intended to be used for your Aetna medical plans and Aetna medical members.

Annual Allowance Type	Year 4	Year 5
Plan Year Effective Date	09/01/2023	09/01/2024
General	$40,000	$40,000
Total	**$40,000**	**$40,000**

Annual allowance amounts may be adjusted if actual enrollment changes by 10 percent or more from our enrollment assumptions.

General Allowance

- Can be used for reasonable general expenses applicable to the plan year for which they are offered.
- You can use the allowance(s) to offset expenses you incur as a result of implementing your contract with us, promoting products, programs or services, communicating with our members, and our system front-end charges.
- Should you terminate your contract with us, the allowance(s) cannot be used to fund implementation/communication expenses related to the new carrier's contract.

Aetna is also offering the same fees for the dental plan as noted in the exhibit below:

Monthly Per-Employee, Per-Month (PEPM) Fees	PPO Dental
September 01, 2022 Guaranteed Billing Fee PEPM[1]	$3.77
September 01, 2023 Guaranteed Billing Fee PEPM[1]	$3.77
Percent Change	0.00%
Claim Fiduciary	Aetna is Claim Fiduciary - Level 1
Claim Wire Billing Fees	
Aetna PPO II Network	Included - 40% of Savings
Dental Out of Network Savings Program	Included - 40% of Savings
Pass Through Charges	
Producer Compensation	$0.00

[1] Employee includes only those active employees, retirees, COBRA continuees and disabled employees that are covered under your Aetna dental plan.

San Elizario ISD
P.O. Box 920
San Elizario, TX 79849
Phone 915.872.3900
Fax 915.872.3903

Aetna is offering an increase in the amount rebated back to the district (estimated to increase by $137K from 2022 to 2023) for pharmacy costs as noted in the exhibit below:

Rebates

REBATES					
Formulary	Aetna Standard Formulary				
Plan Design	3 Tier Qualifying (In Force Today)				
Rebate Terms	Plan sponsor will receive the following guaranteed rebates:				
	09/01/2020	09/01/2021	09/01/2022	09/01/2023	09/01/2024
Retail	$152.76 Per Brand Script	$172.57 Per Brand Script	$179.52 Per Brand Script	$237.97 Per Brand Script	$262.24 Per Brand Script
Retail 90	$362.72 Per Brand Script	$412.57 Per Brand Script	$430.47 Per Brand Script	$567.50 Per Brand Script	$624.02 Per Brand Script
Mail Order	$403.02 Per Brand Script	$458.40 Per Brand Script	$478.31 Per Brand Script	$630.55 Per Brand Script	$693.36 Per Brand Script
Specialty Non-Hepatitis C	$1,394.21 Per Brand Script	$1,643.92 Per Brand Script	$1,730.48 Per Brand Script	$2,564.71 Per Brand Script	$2,825.50 Per Brand Script
Specialty Hepatitis C	$8,130.84 Per Brand Script	$8,130.84 Per Brand Script	$8,130.84 Per Brand Script	$12,916.39 Per Brand Script	$12,916.39 Per Brand Script

Aetna is proposing an increase in the stop loss insurance rate as noted in the exhibit below:

Financial Summary	Current	Renewal
Total ISL & ASL Composite PEPM Rate	$187.40	$211.76
Estimated Monthly Premium	$80,769	$97,621
Estimated Policy Period Stop Loss Premium	$969,233	$1,171,456
% Change in Total Stop Loss Premium		13.0%

San Elizario ISD
P.O. Box 920
San Elizario, TX 79849
Phone 915.872.3900
Fax 915.872.3903

Financial statements for the health fund as of 3/31/23 are included under Exhibit H-4 and the activity to date currently shows a loss of $69,705. A more detailed version is included below:

Account Name	Quarter Ending September 2022	Quarter Ending December 2022	Quarter Ending March 2023	Year To Date
Employee Contributions	$ 317,228	$ 355,982	$ 349,829	$ 1,023,039
Employer Contributions	$ 701,587	$ 784,282	$ 778,032	$ 2,263,901
Health Savings Account Contributions	$ 17,510	$ 19,593	$ 18,943	$ 56,046
Flexible Spending Account Contributions	$ 9,404	$ 9,129	$ 9,592	$ 28,125
Interest Earned	$ 167	$ 297	$ 365	$ 829
Total Revenues	$ 1,045,895	$ 1,169,283	$ 1,156,762	$ 3,371,940
Claims Paid	$ 1,015,221	$ 1,081,115	$ 1,026,589	$ 3,122,926
Aetna Fees	$ 50,973	$ 54,424	$ 54,575	$ 159,973
HUB Consultant Fees	$ 6,000	$ 6,000	$ 6,000	$ 18,000
Employee Assistance Program Fees	$ 2,214	$ 2,214	$ 738	$ 5,166
Rebates & Recoveries	$ (341,792)	$ (65,199)	$ (283,445)	$ (690,436)
Stop Loss Insurance	$ 223,685	$ 255,954	$ 256,865	$ 736,504
Flexible Spending Account Claims	$ 13,247	$ 6,989	$ 10,721	$ 30,957
Health Savings Account Claims	$ 17,880	$ 20,489	$ 20,186	$ 58,554
Total Expenses	$ 987,429	$ 1,361,987	$ 1,092,230	$ 3,441,645
Income (Loss)	$ 58,466	$ (192,703)	$ 64,532	$ (69,705)

Even though some fees will remain the same, employee and/or employer contributions will need to be increased for the upcoming plan year to offset the increase in stop loss insurance costs, to offset the current deficit in the plan, to offset any increases in rising medical costs and/or increases in plan utilization.

BUDGET IMPACT: The impact to the health fund will be dependent on the factors noted above.

ADMINISTRATIVE RECOMMENDATION: The administrative recommendation is to approve the first one-year extension with Aetna (RFP#20-1074)

Please check one: ☒ For approval ☐ Report / Information only ☐ Recognition only

San Elizario ISD
P.O. Box 920
San Elizario, TX 79849
Phone 915.872.3900
Fax 915.872.3903

MEMORANDUM

To: Members of the Board of Trustees
From: Norberto Rivas, Chief Financial Officer
Subject: Consider and possible Board action to schedule special meetings for a budget workshop on May 23, 2023 and for budget adoption on June 21, 2023
Date: May 10, 2023

HISTORY: Last year the Board held a special meeting on May 25, 2022 for Budget Workshop #1 and a special meeting on June 20, 2022 for the Budget Adoption.

RATIONALE: The purpose of this agenda item is to plan and schedule special meetings for this year's budget process with a possible schedule as follows:

- Special Board Meeting – Tuesday, May 23, 2023 – Budget Workshop #1
- Regular Board Meeting – Wednesday, June 14, 2023 – Budget Workshop #2
- Special Board Meeting – Wednesday, June 21, 2023 – Budget Adoption

BUDGET IMPACT: There is no budget impact with this agenda item.

ADMINISTRATIVE RECOMMENDATION: The administrative recommendation is to approve the special meetings as presented.

Please check one: ☒ For approval ☐ Report / Information only ☐ Recognition only

San Elizario ISD
P.O. Box 920
San Elizario, TX 79849
Phone 915.872.3900
Fax 915.872.3903

MEMORANDUM

To: Members of the Board of Trustees
From: Lisa Renegar; Planning & Instruction
Subject: Changes to 2023-2024 District Calendar
Date: May 10, 2023

HISTORY: The 2023-2024 District Calendar was approved by the Board of Trustees on January 18, 2023. Since that time, extensive planning for the 2023-2024 school year has taken place within the SEISD leadership and instructional teams. This planning has revealed the need for 3 minor changes to the approved 2023-2024 District Calendar. The current 2023-2024 District Calendar is attached for your review to see the dates in question.

RATIONALE: In the approved 2023-2024 calendar, July 21, 2023 is designated as a full day of guided lesson planning. The intent was to give a full day for teacher grade level and subject teams to plan instruction under the guidance of Instructional Specialists, Instructional Officers, and administrative teams. As planning has continued, it was determined that the annual district Convocation would need to be moved to the morning of this date, July 21, 2023. The previous two days (July 19-20, 2023) are scheduled for Mental Health First Aid training and Solution Tree PLC training, respectively. There is not enough time on 7/19-7/20 to add in the Convocation. Following the Convocation, staff will move back to their campuses and continue with campus-based professional development after lunch. It was determined that due to the training scheduled for 7/19-7/20, which both align to district initiatives, that campuses did not have enough time at the start of the school year to conduct their own training. The afternoon of 7/21/23 has thus shifted to campus PD to allow for that training to occur.

In addition to these changes on 7/21/23, two other minor changes to the calendar are necessary. The afternoons of February 14, 2024 and April 5, 2024 will be switched in terms of purpose. February 14th will become an afternoon of professional development, and the afternoon of April 5th will become an afternoon of guided planning for teachers. Campus and District leadership felt that April 5th, 2024 was too late in the year to effectively introduce new training for teachers.

These 3 minor changes are intended to streamline the 2023-2024 school year and will not impact teacher planning time in any way. Teachers will have extensive planning time during the school year as part of PLC meetings and guided planning sessions. Teachers also use their daily conference periods for lesson planning. Additionally, campus Principals are also planning their own release time for teachers, in which guest teachers are brought in to allow teachers additional time to plan as grade level and subject teams. The switching of intent between 2/14/24 and 4/5/24 will not remove planning time, it just changes the dates.

San Elizario ISD
P.O. Box 920
San Elizario, TX 79849
Phone 915.872.3900
Fax 915.872.3903

BUDGET: There is no budgetary impact.

ADMINISTRATIVE RECOMMENDATION: It is recommended that the Board approve these calendar changes as requested.

Please check one: ☒ For approval ☐ Report / Information only ☐ Recognition only
☒ Attachment Included

2023-2024 District Calendar San Elizario ISD

The District of Choice

Holidays/District Closure

July 4	Independence Day
July 3, 5-7, 10, 17	District Closure
Sept. 4	Labor Day
Oct. 3-13	Fall Intersession
Nov. 10	Veteran's Day (Observed)
Nov. 21-24	Thanksgiving Break
Dec. 19-Jan. 1	Winter Holidays
Jan. 15	Martin Luther King, Jr. Day
Mar. 5-8	Spring Intersession
Mar. 12-15	Spring Break
Mar. 29	Good Friday
May 27	Memorial Day

Grading Periods

1st 9-Weeks	July 25--Sept. 29
2nd 9-Weeks	Oct. 17--Dec. 15
3rd 9-Weeks	Jan. 3--Mar. 1
4th 9-Weeks	Mar. 19--May 31

Parent/Teacher Conferences--Fall and Spring

GEMS	Sept. 12 and Feb. 20
SEHS	Sept. 14 and Feb. 22
Alarcon/Borrego	Oct. 24 and Mar. 21
Loya/Sambrano	Oct. 26 and Mar. 26

Smart Snack Exemption Days
Oct. 31, Dec. 15, Feb. 14, Mar. 28, May 31

New Teacher Orientation Training
July 18

Early Release for Students and Staff
Dec. 15, Mar. 28

Graduation Day
May 31

Teacher Professional Development (3 total days)
July 19-20 (full days), Oct. 31 (1/2 day), Apr. 5 (1/2 day)

Teacher Guided Lesson Planning (2 total days)
July 21 (full day), Sept. 29 (1/2 day), Feb. 14 (1/2 day)

Teacher Workdays (3 total days)
July 24, Jan. 2, June 3

Inclement Weather Make-up Days (As Needed)
Apr. 8, Apr. 15, Apr. 22, Apr. 29, May 6, May 13, May 20

Teacher Contract Days (155 Days)
Fall Semester: 75 Spring Semester: 80

Student Learning Days (149 Days)
Fall Semester: 71 Spring Semester: 78

Annual Instructional Minutes
Required Total for Grades PPK-12: 75,600
SEISD Instructional Minutes: 76,515

LEGEND

- Teacher Professional Development
- { Teacher 1/2 Day Prof. Development
- ^ Early Release for Students
- Teacher Guided Planning Full Day
- Teacher Guided Planning Half-Day
- > Early Release for Students and Staff
- Teacher Workday
- New Teacher Orientation
- Parent/Teacher Conferences
- First or Last Day of 9-Weeks
- ~ Graduation Day
- Eagle Mondays/District Closure
- 194-day Employee Workday
- Intersession
- Inclement Weather Make-up Day
- Holiday/District Closure
- Smart Snack Exemption Day
- * TELPAS State Testing Window
- STAAR State Testing Window

**Note: State Testing Windows are subject to change as per TEA.*

July 2023

S	M	T	W	T	F	S
2	3	4	5	6	7	8
9	10	11	12	13	14	15
16	17	18	19	20	21	22
23	24	25	26	27	28	29
30	31					

August 2023

S	M	T	W	T	F	S
		1	2	3	4	5
6	7	8	9	10	11	12
13	14	15	16	17	18	19
20	21	22	23	24	25	26
27	28	29	30	31		

September 2023

S	M	T	W	T	F	S
					1	2
3	4	5	6	7	8	9
10	11	12	13	14	15	16
17	18	19	20	21	22	23
24	25	26	27	28	^29	30

October 2023

S	M	T	W	T	F	S
1	2	3	4	5	6	7
8	9	10	11	12	13	14
15	16	17	18	19	20	21
22	23	24	25	26	27	28
29	30	^{31				

November 2023

S	M	T	W	T	F	S
			1	2	3	4
5	6	7	8	9	10	11
12	13	14	15	16	17	18
19	20	21	22	23	24	25
26	27	28	29	30		

December 2023

S	M	T	W	T	F	S
					1	2
3	4	5	6	7	8	9
10	11	12	13	14	>15	16
17	18	19	20	21	22	23
24/31	25	26	27	28	29	30

January 2024

S	M	T	W	T	F	S
	1	2	3	4	5	6
7	8	9	10	11	12	13
14	15	16	17	18	19	20
21	22	23	24	25	26	27
28	29	30	31			

February 2024

S	M	T	W	T	F	S
				1	2	3
4	5	6	7	8	9	10
11	12	13	^14	15	16	17
18	19	*20	*21	*22	*23	24
25	26	*27	*28	*29		

March 2024

S	M	T	W	T	F	S
					*1	2
3	4	5	6	7	8	9
10	11	12	13	14	15	16
17	18	*19	*20	*21	*22	23
24/31	25	*26	*27	*>28	29	30

April 2024

S	M	T	W	T	F	S
	1	2	3	4	^{5	6
7	8	9	10	11	12	13
14	15	16	17	18	19	20
21	22	23	24	25	26	27
28	29	30				

May 2024

S	M	T	W	T	F	S
			1	2	3	4
5	6	7	8	9	10	11
12	13	14	15	16	17	18
19	20	21	22	23	24	25
26	27	28	29	30	~31	1

June 2024

S	M	T	W	T	F	S
2	3	4	5	6	7	8
9	10	11	12	13	14	15
16	17	18	19	20	21	22
23	24	25	26	27	28	29
30						

Approval Date: 1/18/2023

Revised: January 2023

San Elizario ISD
P.O. Box 920
San Elizario, TX 79849
Phone 915.872.3900
Fax 915.872.3903

MEMORANDUM

To: Members of the Board of Trustees
From: Amanda Sanchez-Muñoz, Special Education Department
Subject: Pay Scale for Transition Specialist
Date: May 10, 2023

HISTORY: Currently, the district has a pay scale reflecting $40 per hour for services from a Transition Specialist.

RATIONALE: The district is currently paying teachers $50 per hour for services outside of their contract. It is recommended to increase the Transition Specialist rate of pay to $50 per hour to be comparable to what other certified teachers in the district are paid hourly. Additionally, surrounding districts pay more than $50 per hour for contracted services in specialized areas in special education so this will help us to be competitive with other district rates.

BUDGET: The rate of pay will increase from $40 per hour to $50 per hour for the months of May and June for one part-time contracted Transition Specialist. This will result in an increase of less than $1500 for this school year. The school district does not anticipate utilizing a Transition Specialist for next school year at this time.

ADMINISTRATIVE RECOMMENDATION: The administrative recommendation is to approve the pay rate increase as presented.

Please check one: ☒ For approval ☐ Report / Information only ☐ Recognition only
☐ Attachment Included

San Elizario ISD
P.O. Box 920
San Elizario, TX 79849
Phone 915.872.3900
Fax 915.872.3903

MEMORANDUM

To: Members of the Board of Trustees
From: Lisa D. Renegar; Planning & Instruction
Subject: Progress Monitoring—GPM 2.2—3rd Grade Reading Progress
Date: May 10, 2023

HISTORY:

The Board of Trustees has been progress monitoring Grade 3 reading performance for the last several years. One of the Goal Progress Measures (GPM's) that provides part of the necessary data comes from GPM 2.2, which measures the following:

Goal Progress Measure (GPM) 2.2:
Student Reading performance on the IStation Overall Reading Ability Index in 3rd Grade will increase annually from 2021-2022 (baseline) through 2023-2024 at the Approaches, Meets, and Masters levels as indicated in the table below.

GPM 2.2: IStation Reading Overall Ability Index—3rd Grade	Baseline 2021-2022	Goals 2022-2023	Goals 2023-2024
Approaches	13%	17% **Actual: 36%**	20%
Meets	27%	30% **Actual: 22%**	32%
Masters	13%	14% **Actual: 5%**	15%

At the April 17, 2023 Board meeting, it was discussed that student progress monitoring would change to a growth model for the upcoming school year. There are not yet revised Student Outcome Goals and Goal Progress Measures in place. Once these are established and approved by the Board, this new data analysis model will be presented to the Board in subsequent reports to monitor reading and math in terms of student growth.

RATIONALE:

There were 192 students in grade 3 who were assessed in iStation reading during the month of April 2023. Istation assessments occur on a monthly basis. Students were assessed in either English or Spanish depending on their needs. The data for the month of April 2023 shows that our 3rd grade students have made solid progress in their reading abilities. We have exceeded the Approaches level by 19%. The Approaches level is considered "passing." Our students are making progress at the Meets level. Since the last Board report in January of 2023, our 3rd

San Elizario ISD
P.O. Box 920
San Elizario, TX 79849
Phone 915.872.3900
Fax 915.872.3903

graders have gained 25% at the Approaches level, 13% at the Meets level, and have maintained 5% at the Masters level. The total percentage of 3rd grade students passing reading via the IStation assessments is 63% for the month of April 2023. These students will be assessed again in May 2024 to determine final levels of reading performance for this school year.

Board Progress Monitoring Report

Student Outcome Goal 2	Overall Goal Evaluation
Student Reading performance on the STAAR/EOC in grades 3-12 will increase annually from 2021-2022 through 2023-2024 at the Approaches, Meets, and Master's Levels.	**Significantly Improved**

There were 192 students in grade 3 who were assessed in iStation reading during the month of April 2023. IStation assessments occur on a monthly basis. Students were assessed in either English or Spanish depending on their needs. The data for the month of April 2023 shows that our 3rd grade students have made solid progress in their reading abilities. We have exceeded the Approaches level by 19%. The Approaches level is considered "passing." Our students are making progress at the Meets level. Since the last Board report in January of 2023, our 3rd graders have gained 25% at the Approaches level, 13% at the Meets level, and have maintained 5% at the Masters level. The total percentage of 3rd grade students passing reading via the IStation assessments is 63% for the month of April 2023. These students will be assessed again in May 2024 to determine final levels of reading performance for this school year.

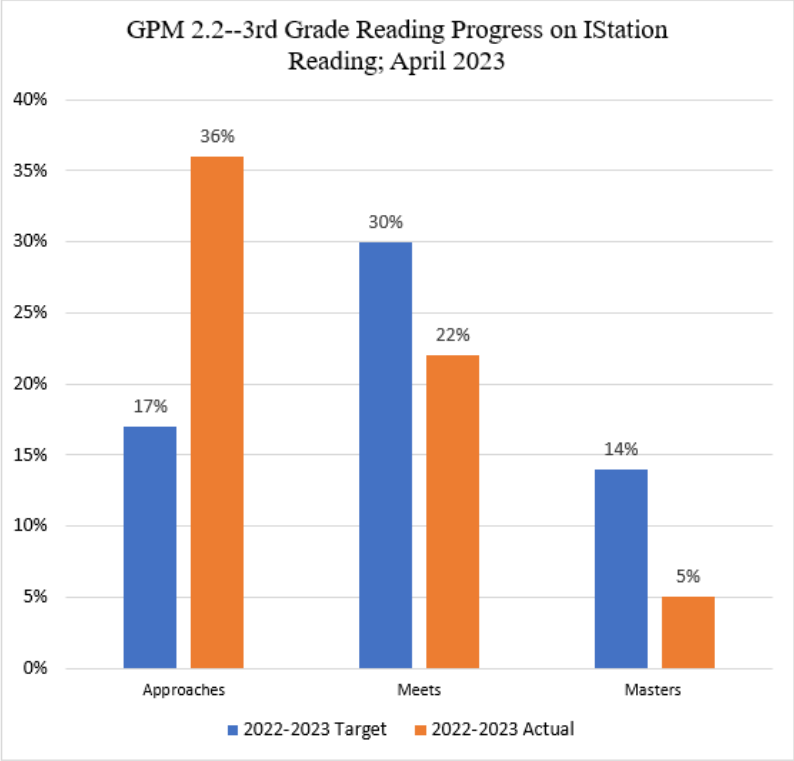

Superintendent's Evaluation on Next Steps: Refer to Board of Trustees Memo submitted with this report.

San Elizario ISD
P.O. Box 920
San Elizario, TX 79849
Phone 915.872.3900
Fax 915.872.3903

The interventions and instructional support in place to assist with reading mastery are described below:

- Walkthroughs, feedback, and lesson modeling from Administration
- Teacher assistance via the Impact Cycle, learning walks, and lesson modeling
- Small group intervention via the Reading Interventionist
- Small group intervention for newcomers via the Bilingual Aide
- Data PLC's to disaggregate data
- Use of pre- and post- assessments to establish the current level of performance and monitor progress
- Monitor progress and plan interventions according to weekly results such as small group reteach or review, extra practice on skills attainment
- Use of online resources such as Learning A-Z
- Guided Reading
- Parent involvement to include open communication with parents via Class Dojo, phone calls, conferences, email
- District assistance via direct support for 3rd grade teachers and students in the classroom and during teacher professional development

BUDGET:
There is no identified budgetary impact for GPM 2.2.

ADMINISTRATIVE RECOMMENDATION:

It is recommended that the Board review the progress of GPM 2.2 as presented.

Please check one: ☐ For approval ☒ Report / Information only ☐ Recognition only
☐ Attachment Included

San Elizario ISD
P.O. Box 920
San Elizario, TX 79849
Phone 915.872.3900
Fax 915.872.3903

MEMORANDUM

To: Members of the Board of Trustees
From: Lisa D. Renegar; Planning & Instruction
Subject: Progress Monitoring—GPM 2.3—8th Grade Reading Progress
Date: May 10, 2023

HISTORY:

The Board of Trustees has been progress monitoring Grade 8 reading performance for the last several years. One of the Goal Progress Measures (GPM's) that provides part of the necessary data comes from GPM 2.3, which measures the following:

Goal Progress Measure (GPM) 2.3:
Student Reading performance on the TRS Unit Assessments in 8th Grade Reading will increase annually from 2021-2022 (baseline) through 2023-2024 at the Approaches, Meets, and Masters levels.

GPM 2.3: TRS Unit Assessments—8th Grade	Baseline 2021-2022	Goals 2022-2023	Goals 2023-2024
Approaches	59%	62% Actual—43%	65%
Meets	26%	28% Actual—25%	30%
Masters	15%	16% Actual—18%	17%

At the April 17, 2023 Board meeting, it was discussed that student progress monitoring would change to a growth model for the upcoming school year. There are not yet revised Student Outcome Goals and Goal Progress Measures in place. Once these are established and approved by the Board, this new data analysis model will be presented to the Board in subsequent reports to monitor reading and math in terms of student growth.

RATIONALE:

There were 281 students in grade 8 assessed with 5 English (RLA) Unit Assessments from August-December 2022. The results highlighted in yellow above correspond to the average of these 5 Unit Assessments at each of the 3 performance levels. At the Approaches level (considered passing), our students are closing their learning gaps. At the Meets level, we are

San Elizario ISD
P.O. Box 920
San Elizario, TX 79849
Phone 915.872.3900
Fax 915.872.3903

within 3 percentage points of the target. At the Masters level, our 8th graders have exceeded the target by 2 points.

There are still 1-2 TRS unit assessments remaining for this school year.

The graph on the following page indicates the performance of our 8th grade students in reading relative to the current targets.

Board Progress Monitoring Report

Student Outcome Goal 2	Overall Goal Evaluation
Student Reading performance on the STAAR/EOC in grades 3-12 will increase annually from 2021-2022 through 2023-2024 at the Approaches, Meets, and Master's Levels.	**Improving**

There were 281 students in grade 8 assessed with 5 English (RLA) Unit Assessments from August-December 2022. The results highlighted in yellow above correspond to the average of these 5 Unit Assessments at each of the 3 performance levels. At the Approaches level, our students are closing their learning gaps and will soon reach the goal of 62%. At the Meets level, we are within 3 percentage points of the target. At the Masters level, our 8th graders have exceeded the target by 2 points.

There are still 1-2 unit assessments remaining for 8th grade reading this year.

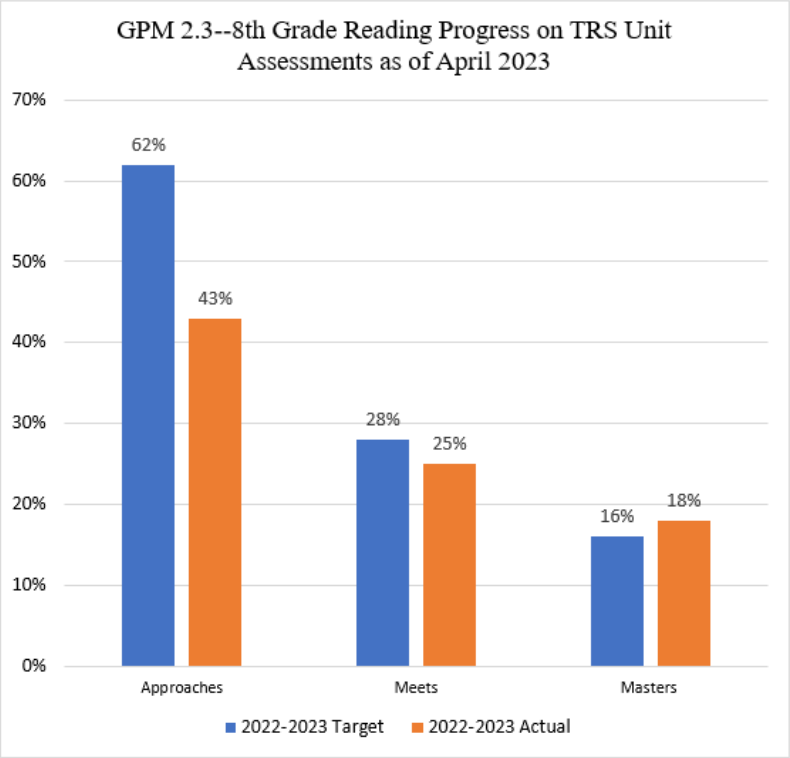

Superintendent's Evaluation on Next Steps: Refer to Board of Trustees Memo submitted with this report.

San Elizario ISD
P.O. Box 920
San Elizario, TX 79849
Phone 915.872.3900
Fax 915.872.3903

For 8th grade students who are struggling in reading, GEMS has interventions in place that provide campus- and district- level instructional support:

- Reading STAAR labs
- Targeted data digs
- Wednesday tutoring
- Saturday campus
- Fall and spring intersessions
- IXL online intervention program
- iReady online intervention program
- Reading Interventionist pullout
- Aides assigned to STAAR labs and ESL classes

BUDGET:
There is no identified budgetary impact for GPM 2.3.

ADMINISTRATIVE RECOMMENDATION:

It is recommended that the Board review the progress of GPM 2.3 as presented.

Please check one: ☐ For approval ☒ Report / Information only ☐ Recognition only
☐ Attachment Included

San Elizario ISD
P.O. Box 920
San Elizario, TX 79849
Phone 915.872.3900
Fax 915.872.3903

MEMORANDUM

To: Members of the Board of Trustees
From: Lisa D. Renegar; Planning & Instruction
Subject: Progress Monitoring—GPM 2.4—High School Reading (English I and II)
Date: May 10, 2023

HISTORY:

The Board of Trustees has been progress monitoring high school reading performance for the last several years. One of the Goal Progress Measures (GPM's) that provides part of the necessary data comes from GPM 2.4, which measures the following:

Goal Progress Measure (GPM) 2.4:
Student reading performance on the TRS Unit Assessments in high school English I and II will increase annually from 2021-2022 (baseline) through 2023-2024 at the Approaches, Meets, and Masters levels.

GPM 2.4: TRS Unit Assessments—High School English I and II	Baseline 2021-2022	Goals 2022-2023	Goals 2023-2024
Approaches	53%	56% Actual—61%	60%
Meets	36%	38% Actual—42%	40%
Masters	5%	6% Actual—6%	7%

At the April 17, 2023 Board meeting, it was discussed that student progress monitoring would change to a growth model for the upcoming school year. There are not yet revised Student Outcome Goals and Goal Progress Measures in place. Once these are established and approved by the Board, this new data analysis model will be presented to the Board in subsequent reports to monitor reading and math in terms of student growth.

RATIONALE:

SEHS has approximately 609 students who are enrolled in English I and II courses. During the 2022-2023 school year, these predominantly 9th and 10th grade students have taken 5 TRS unit assessments in English I and 5 TRS unit assessments in English II. Each of these courses still has 1–2 unit assessments remaining in the school year.

San Elizario ISD
P.O. Box 920
San Elizario, TX 79849
Phone 915.872.3900
Fax 915.872.3903

These students have exceeded the targets at the Approaches (considered passing) level and Meets level of performance. At the Masters level, they have met the target of 6%.

The graph on the following page indicates the performance of our high school English I/II students in reading relative to the current targets.

Board Progress Monitoring Report

Student Outcome Goal 2	Overall Goal Evaluation
Student Reading performance on the STAAR/EOC in grades 3-12 will increase annually from 2021-2022 through 2023-2024 at the Approaches, Meets, and Master's Levels.	**Exceeds Expectations**

SEHS has approximately 609 students who are enrolled in English I and II courses.

During the 2022-2023 school year, these predominantly 9th and 10th grade students have taken 5 TRS unit assessments in English I and 5 TRS unit assessments in English II.

Each of these courses still has 1-2 unit assessments remaining in the school year.

These students have exceeded the targets at the Approaches (considered passing) level and Meets level of performance. At the Masters level, they have met the target of 6%.

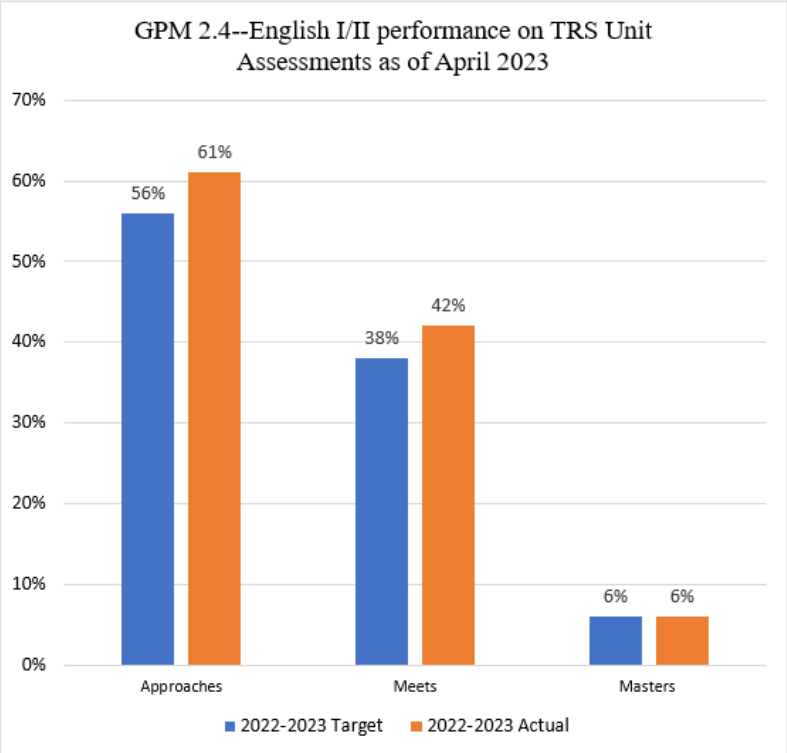

Superintendent's Evaluation on Next Steps: Refer to Board of Trustees Memo submitted with this report.

San Elizario ISD
P.O. Box 920
San Elizario, TX 79849
Phone 915.872.3900
Fax 915.872.3903

For students in need of reading support, these are the SEHS reading interventions currently in place:

- Intervention classes
- Tutoring sessions after school and Saturdays
- Edgenuity program
- iXL intervention program
- Sirius Education
- Lead4ward Rockin'Reviews
- Monthly vertical alignment meetings
- Weekly integrtion of district T.A.P./Exit tickets
- Reading Response Journals

BUDGET:
There is no identified budgetary impact for GPM 2.4.

ADMINISTRATIVE RECOMMENDATION:

It is recommended that the Board review the progress of GPM 2.4 as presented.

Please check one: ☐ For approval ☒ Report / Information only ☐ Recognition only
☐ Attachment Included

San Elizario ISD
P.O. Box 920
San Elizario, TX 79849
Phone 915.872.3900
Fax 915.872.3903

MEMORANDUM

To: Members of the Board of Trustees
From: Lisa D. Renegar; Planning & Instruction
Subject: CPM 2.1 Progress Monitoring--Principal Walkthrough Totals
Date: May 10, 2023

HISTORY:

Constraint Progress Measure (CPM) 2.1 states:

CPM 2.1: The number of Principal classroom walkthroughs per week with feedback will increase from 2 in June 2018 to 10 by June 2024.

The 2022-2023 Annual Target for CPM 2.1 is 10 walkthroughs per week per Principal.

RATIONALE:

The annual target for 2022-2023 is 10 walkthroughs per week for each Principal. This report is for a time period of 29 "observable" weeks, running from July 26, 2022—April 25, 2023. The target number of walkthroughs for this time period is 290. These counts are inclusive of T-TESS observations, regular walkthroughs, and visits to guest teachers.

These are the walkthrough totals for each Principal:

Ms. Wilks—301	Ms. de Santos—319	Mr. Salcido—300
Ms. Esquivel—300	Mr. Seigel—330	Ms. Marioni—329

All 6 of our Principals exceeded the target.

The graph follows on the next page.

San Elizario ISD
P.O. Box 920
San Elizario, TX 79849
Phone 915.872.3900
Fax 915.872.3903

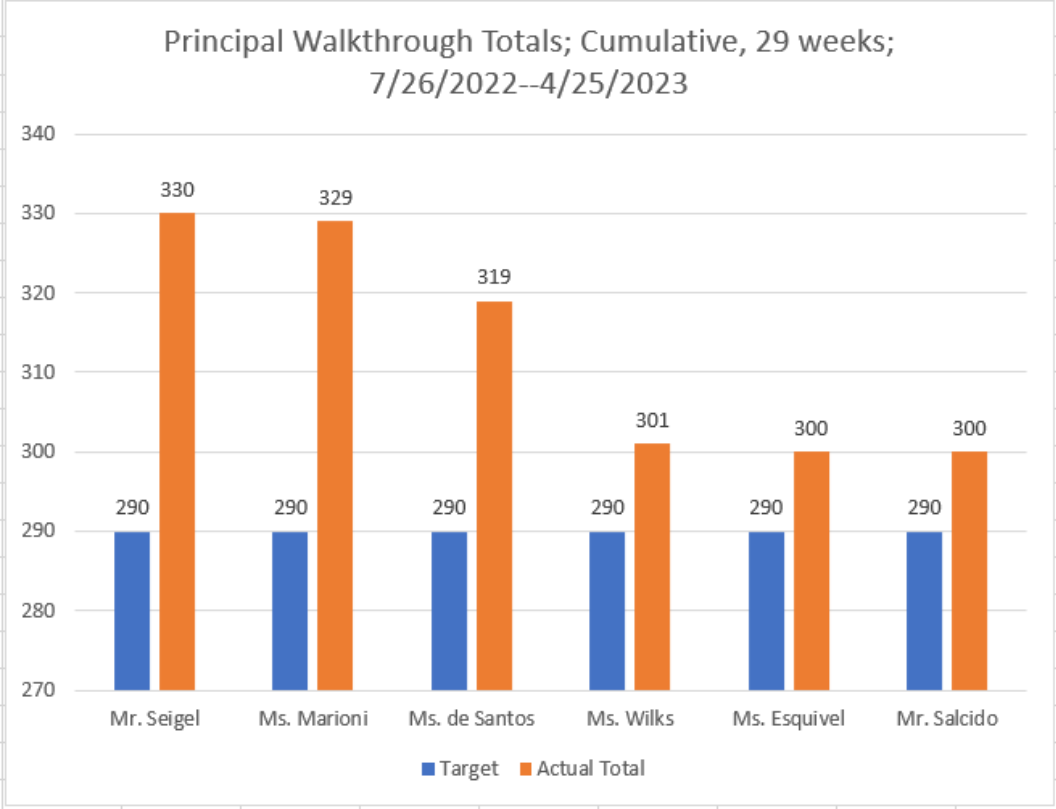

BUDGET:

There is no identified budgetary impact.

ADMINISTRATIVE RECOMMENDATION:

It is recommended to review CPM 2.1 as presented.

Please check one: ☐ For approval ☒ Report / Information only ☐ Recognition only
☐ Attachment Included

San Elizario ISD
P.O. Box 920
San Elizario, TX 79849
Phone 915.872.3900
Fax 915.872.3903

MEMORANDUM

To: Members of the Board of Trustees
From: Lisa D. Renegar; Planning & Instruction
Subject: CPM 2.2 Progress Monitoring—Assistant Principal Walkthrough Totals
Date: May 10, 2023

HISTORY:

Constraint Progress Measure (CPM) 2.2 states:

CPM 2.1: The number of Assistant Principal classroom walkthroughs per week with feedback will increase from 2 in June 2018 to 10 by June 2024.

The 2022-2023 Annual Target for CPM 2.2 is 10 walkthroughs per week per Assistant Principal.

RATIONALE:

The annual target for 2022-2023 is 10 walkthroughs per week for each Assistant Principal. This report is for a time period of 29 "observable" weeks, running from July 26, 2022—April 25, 2023. The target number of walkthroughs for this 29-week time period is 290. These counts are inclusive of T-TESS observations, regular walkthroughs, and visits to guest teachers.

These are the walkthrough totals for each Assistant Principal:

*Mrs. Nunn—158 (Started work on 11/21/22, target is 150).	Ms. Pallares--152	Ms. Brashear--301
Mr. Parra—204	Mr. Corona-337	Ms. Rico--323
*Ms. Robles—153 (Started work on 9/28/22, target is 190).		

**Note: Mrs. Nunn and Ms. Robles have lower targets due to starting their positions after the year had begun.*

Four out of 7 Assistant Principals exceeded their targets, and 3 out of 7 did not reach the target.

The graph follows on the next page.

San Elizario ISD
P.O. Box 920
San Elizario, TX 79849
Phone 915.872.3900
Fax 915.872.3903

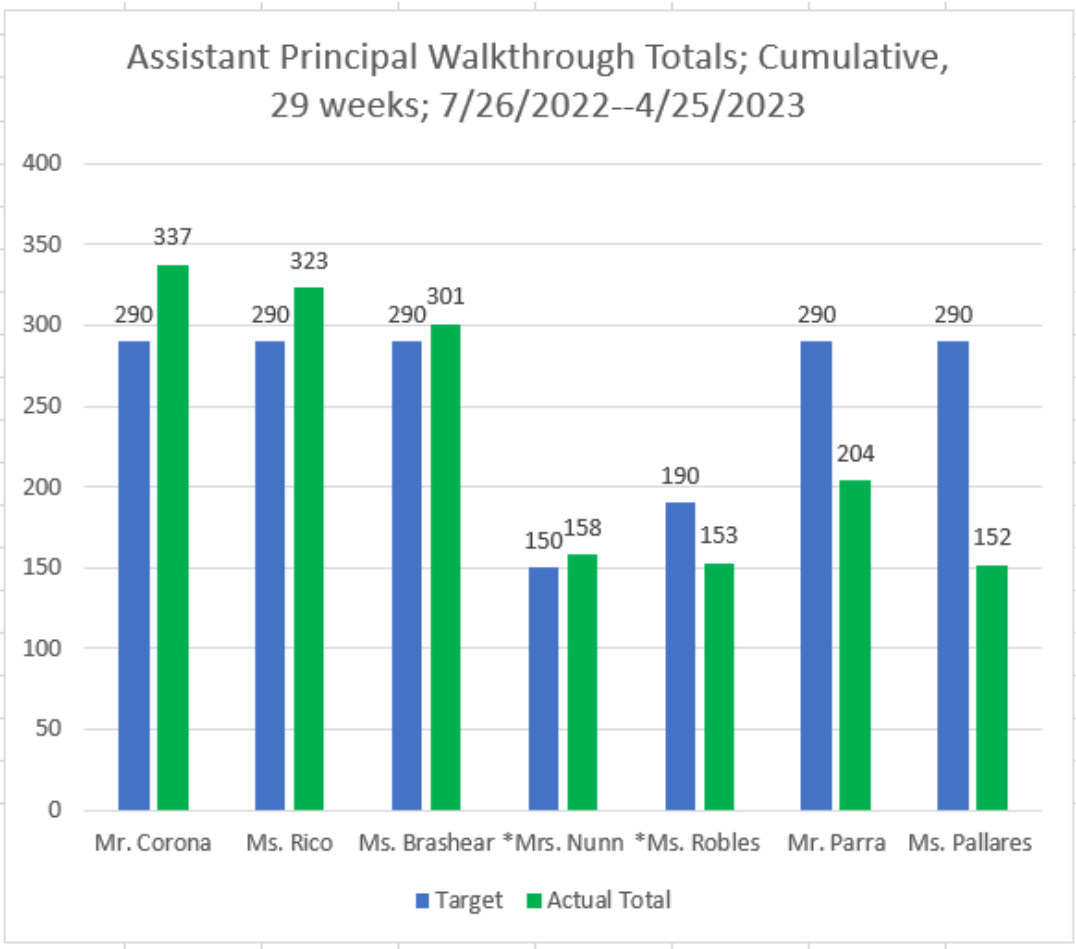

BUDGET:

There is no identified budgetary impact.

ADMINISTRATIVE RECOMMENDATION:

It is recommended to review CPM 2.2 as presented.

Please check one: ☐ For approval ☒ Report / Information only ☐ Recognition only
☐ Attachment Included

San Elizario ISD
P.O. Box 920
San Elizario, TX 79849
Phone 915.872.3900
Fax 915.872.3903

MEMORANDUM

To: Members of the Board of Trustees
From: Rogelio Segovia, Associate Superintendent
Subject: Memorandum of Understanding – El Paso Community Action Program Project BRAVO, Inc.
Date: May 10, 2023

HISTORY:

Project BRAVO was established in 1965. This organization tries to maximize resources to help improve the quality of life for economically disadvantaged residents of El Paso County (projectbravo.org, 2000).

RATIONALE:

This partner will allow Project Bravo to provide services such as utility assistance and weatherization to eligible community members.

BUDGET:

There is no budget impact.

ADMINISTRATIVE RECOMMENDATION:

Administration recommends the Board of Trustees approve the Memorandum of Understanding with El Paso Community Action Program Project BRAVO, Inc.

Please check one: ☒ For approval ☐ Report / Information only ☐ Recognition only

Memorandum of Understanding

Between

El Paso Community Action Program Project BRAVO, Inc.

and

San Elizario Independent School District

I. Purpose and Scope

The purpose of this MOU is to clearly define the roles and responsibilities of each party as they relate to El Paso Community Action Program Project BRAVO, Inc. ("Project BRAVO") programs and services and referral to the Fabens, Clint, San Elizario, Socorro, Tornillo, and surrounding communities. This MOU is a collaboration of Project BRAVO, and the San Elizario Independent School District Excell Academy (~~The~~ the "District").

In particular this MOU is intended to:

Enhance services provided in the outer ~~counties~~ County of El Paso, increase accessibility of services, and minimize barriers to accessing these services in the ~~outline~~ outlying areas of the community.

II. El Paso Community Action Program Project BRAVO, Inc. Responsibilities under this MOU

Project BRAVO shall undertake the following activities:

- Provide programs and services (ex. utility assistance, weatherization) offered by Project BRAVO to eligible clients per Project BRAVO policies.
- Provide one to two staff members to conduct intakes and help clients access Project BRAVO services and referrals to other programs.
- Promote confidentiality concerning clients.
- Ensure that the phone, fax, copier, and internet are used to provide client services only.
- Inform clients of Excell Academy services by providing informational materials.
- Client records will be maintained per Project BRAVO policies and procedures by Project BRAVO staff.
- Community Services Manager will supervise all activities with Project BRAVO staff.
- Project BRAVO will install internet services in their office space.
- Staff will comply with building policies (ex. park in employee area).

III. San Elizario Independent School District Excell Academy Responsibilities under this MOU

San Elizario Independent School District Excell Academy shall undertake the following activities:

- Provide office space for one to two Project BRAVO staff, desk, phone and access to internet, fax, and copier.
- Allow Project BRAVO access to install internet service in their office.
- Provide Project BRAVO staff parking stickers.
- Agree to adhere to the confidentiality of Project BRAVO clients and client files.

IV. Timeline

It is mutually understood and agreed by and between parties that:

Responsibilities under this Memorandum of Understanding would coincide with the period, anticipated to be July 1, 2023 through June 30, 2024. Either party may terminate this agreement by providing a 30-day written notice. This MOU will be reviewed and considered for ~~renewed~~ renewal ~~based on~~subject to grant funding each ~~grant funded~~ school year.

V. Funding

This MOU does not include the reimbursement of funds between the two parties.

VI. Legal Requirements

In the performance of this Agreement, it is mutually understood and agreed that Project BRAVO and its employees are at all times acting and performing as independent service providers with, and not as employees, joint ventures, or agents of the District. The District shall neither have nor exercise any control or direction over the specific methods or judgment by which Project BRAVO provides services to students or in connection with any Project BRAVO program. This agreement does not create an employment relationship between Project BRAVO employees and the District. The District shall not be liable in any way for any compensation, wages or expenses of Project BRAVO personnel in connection with providing services to the students participating in any Project BRAVO program. Project BRAVO personnel are not entitled to participate in any pension plans, bonus, stock, or similar benefits that the District provides for its employees, including workers' compensation insurance, unemployment compensation, vacation pay, sick leave, retirement benefits, Social Security benefits, disability insurance benefits, unemployment insurance benefits, or any other employee benefits, all of which shall be the sole responsibility of Project BRAVO.

Any employees or subcontractors having access to district locations must submit to a criminal background check as required by Texas law. Project

BRAVO shall certify that criminal background search records have been completed and that none of its employees or subcontractors have been convicted of a felony, or misdemeanor involving moral turpitude, or of any crime involving harm to a child.

The criminal background checks must be performed before any new employee or subcontractor is permitted to enter District property and at least annually for all employees or subcontractors providing services under this Agreement. Project BRAVO shall provide the District with copies of said criminal background checks within twenty-four (24) hours of written demand for same. The District shall be the final arbiter of what constitutes a "location where students are regularly present."

~~Nothing herein shall be construed to be a waiver of sovereign immunity or similar rights and its rights under the Texas Tort Claims Act by any of the parties, except to the limited extent required by law to enforce the parties' respective obligations to each other hereunder. No provision of this Agreement that imposes an obligation or restriction on the school organization not permitted by applicable law shall be enforceable.~~ Records relating to this Agreement may be subject to disclosure pursuant to the Texas Public Information Act f/k/a Open Records Act, Section 552.001 et. seq. of the Texas Government Code.

The Parties agree that each shall be responsible for funding the obligations and work to be performed by that party. This Agreement is specifically contingent on approval by the governing Board of each Party and shall be null and void if such funding is not approved for any term of the Agreement.

Any additional or expanded services falling within the scope of this Agreement, including the costs thereof, which are mutually agreed to by the parties shall be implemented by a written amendment signed by both Parties. Any associated billing and payment process and schedules shall be specified in the authorizing written amendment.

I. No Third-Party Beneficiary

Nothing in this agreement is intended to or does operate to create any third-party beneficiary rights.

II. Sovereign Immunity

Project BRAVO and the District stipulate and agree that no provision of, or any part of this Agreement or any subsequent amendment shall be construed: (1) as a waiver of the doctrine of sovereign immunity or immunity from suit as provided for in the Texas Constitution and the Laws of the State of Texas; (2) to extend liability beyond such liability provided for in the Texas Constitution and the Laws of the State of Texas; or (3) as a waiver of any immunity provided by the 11th Amendment or any other provision of the United States Constitution

or any immunity recognized by the courts and the laws of the United States.

Nothing herein shall be construed to be a waiver of sovereign immunity or similar rights and its rights under the Texas Tort Claims Act by any of the parties, except to the limited extent required by law to enforce the parties' respective obligations to each other hereunder. No provision of this Agreement that imposes an obligation or restriction on the District not permitted by applicable law shall be enforceable.

X. Notice

Unless otherwise provided herein, all notices or other communication required or permitted to be given under this Agreement shall be in writing and shall be deemed to have been duly given if delivered personally in hand or sent by certified mail, return receipt requested, postage prepaid and addressed to the appropriate party at the following address or to any other person or address as may be designated in writing by the Parties.

For El Paso CAP Project BRAVO, Inc.:	For San Elizario ISD:
Executive Director	Superintendent
Laura Ponce	Dr. Jeannie Meza-Chavez
2000 Texas Ave.	
El Paso, TX 79901	[Mailing Address]

Commented [A1]: Needs information from SEISD.

XI. Governing Law

This Agreement and the rights and obligations of the parties hereto shall be governed by, and construed according to, the laws of the State of Texas, except as specifically noted. Venue shall lie in El Paso County, Texas.

XII. Entire Agreement

This Agreement constitutes the entire agreement of the Parties and is intended as a complete and exclusive statement of the promises, representations, negotiations, discussions, and agreements that have been made in connection with the subject matter. No modifications or amendments of this Agreement shall be binding upon the Parties unless the same is in writing and signed by the respective Parties hereto. All prior negotiations, agreements, and understandings with respect to the subject matter of this Agreement are superseded hereby.

[*Signature page follows*]

This MOU shall be effective upon the signature of both parties authorized officials.

_____	_____
Laura Ponce	Dr. Jeannie Meza-Chavez
Executive Director El Paso CAP Project BRAVO, Inc.	Superintendent San Elizario Independent School District
Date_____	Date_____

{Firm Documents/1938/000/00351051.DOCX }

San Elizario ISD
P.O. Box 920
San Elizario, TX 79849
Phone 915.872.3900
Fax 915.872.3903

MEMORANDUM

To: Members of the Board of Trustees,
Dr. Meza-Chavez, Superintendent

From: Christine Jaksch, Director of Administrative Services,
Dr. Rogelio Segovia, Associate Superintendent

Subject: 2023 Summer School Schedule

Date: May 10, 2023

HISTORY:

Summer school is offered from Monday through Friday. Regular education sessions will conclude at the end of June, with several Special Education instructional courses taking place in July. All courses will conclude on July 14.

RATIONALE:

For 2023, the weekly schedule will accommodate general summer school services and special programs. In addition, Texas Administrative Code requirements of 120 hours of summer school instruction for the bilingual program will be met.

BUDGET:

The district's summer programs will cost approximately $441,293

Function 11	Instruction	$375,468
Function 31	Guidance, Counseling, and Evaluation Services	$11,944
Function 33	Health Services	$1,778
Function 34	Student Transportation	$24,026
Function 35	Food Services	$22,026
Function 52	Security and Monitoring Services	$6,052

ADMINISTRATIVE RECOMMENDATION:

Administration recommends that the Board of Trustees approve the 2023 Summer School Schedule as presented.

Please check one: ☒ For approval ☐ Report / Information only ☐ Recognition only
☒ Attachment Included

Revised: 4/25/2023
Dates are subject to change

2023 Summer School Schedule

Loya Primary/Sambrano Elementary @ Sambrano

- EB PK-K Camp — June 6-16, 2023 — 7:30 a.m. – 2:00 p.m. (30-minute lunch)
  (as mandated by Texas Administrative Code 89.1250 - 120 hours of Summer School Instruction required)
- Monolingual Literacy Camp — June 6-16, 2023 — 7:30 a.m. – 2:00 p.m.
- Reading Carnival — June 16, 2023 — 10:00 a.m. – 12:00 p.m.
- Teacher Summer Planning — Before EOY — 4 hours total

Alarcon Elementary & Borrego Elementary @ Alarcon

- Summer School — June 6 – 16, 2023 — 7:30 a.m. – 2:00 p.m.
- Abuelita's Kitchen — June 6 – 16, 2022 — 8:30 a.m. – 12:30 p.m.
- Teacher Planning day — Before EOY — 4 hours total

Garcia – Enriquez Middle School @SEHS

- Credit Recovery — June 6 - 23, 2023 — 9:00 a.m. – 12:00 p.m.
- Credit Recovery — June 6 – 23, 2023 — 12:30 pm – 3:30 pm
- GEMS Advanced Math (6th & 7th) — June 6 – 9, 2023 — 9:00 a.m. – 12:00 p.m.
- GEMS Algebra Camp — June 6 – 9, 2023 — 9:00 a.m. – 12:00 p.m.

San Elizario High School

- Credit Advancement (AM session) — June 6 - 30, 2023 — 9:00 a.m. – 12:00 p.m.
- Credit Advancement (PM session) — June 6 - 30, 2023 — 12:30 p.m. – 3:30 p.m.
- Credit Recovery — June 6 - 23, 2023 — 9:00 a.m. – 12:00 p.m.
- TSIA2 Boot Camp (TSIA2 Test on June 16th) — June 6 - 16, 2023 — 9:00 a.m. – 12:00 p.m.
- Mariachi Camp — June 6 – 9, 2023 — 1:00 p.m. – 4:00 p.m.
- Drum line Camp — June 6 – 9, 2023 — 9:00 a.m. – 12:00 p.m.
- Color Guard Camp — June 6 – 9, 2023 — 9:00 a.m. – 12:00 p.m.
- JNROTC Camp Leadership Academy (Ft. Bliss) — June 12 – 16, 2023 — All Day
- JNROTC Basic Leadership Academy (Ft. Bliss) — June 19 – 23, 2023 — All Day
- Eagle Ops (previously TAPS) — June 6 – 30, 2023 — 9:00 a.m. – 3:30 p.m. Lunch 12:00 – 12:30 pm
- EOC Summer Camp — June 6 – 16, 2023 — 9:00 a.m. – 12:00 p.m.
- Dual Credit — June 5 – 30, 2023 — 9:00 a.m. – 12:00 p.m.

- SEECHS Bridge Program — June 6 – 9, 2023 — 9:00 a.m. – 12:00 p.m.
- Students In Transition Camp — June 19-20, 2023 — TBD
- CTE Summer Camps @ CTE Building — June 6 - 13, 2023 — 9:00 a.m. – 12:00 p.m.
- Sports & Literacy Camp — June 19 – 23, 2023 — 9:30 a.m. – 11:30 am
  June 26 – 30, 2023 — 9:30 a.m. – 11:30 am

Special Education – June Extended School Year Program @ Alarcon

- SES — June 7 – 9 , 2023 — 8:00 a.m. – 11:00 a.m.
  11:00 a.m. – 2:00 p.m.

Special Education – June Extended School Year Program @ Borrego

- Life Skills — June 7 - 15, 2023 — 8:30 a.m. – 12:30 p.m.

Special Education – June Extended School Year Program @ SEHS

- Life Skills — June 19 - 23, 2023 — 8:30 a.m. – 2:30 p.m.

Special Education – July Extended School Year Program @Borrego

- ASC-Alt — July 12 – 14, 2023 — 8:00 a.m. – 11:30 a.m.

Special Education – July Extended School Year Program @ Sambrano

- SLC — July 12 – 14, 2023 — 9:00 a.m. – 12:00 p.m.

Special Education – July Extended School Year Program @ Sambrano

- SES — July 12 – 14, 2023 — 8:00 a.m. – 11:00 a.m.
  11:00 a.m. – 2:00 pm

Special Education – July Extended School Year Program @ GEMS

- Life Skills — July 12 – 14, 2023 — 8:45 a.m. – 11:45 a.m.

Special Education - Extended School Year Program @ Excell

- ESY Social Skills Camp — June 6-9, 2023 — 8:00 a.m. – 3:00 p.m.

Migrant Summer School @ Alarcon

- Project Smart at Alarcon — June 6-9, 2023 — 8:00 a.m. – 12:00 p.m
- Project Smart at UTEP — June12 -16, 2023 — 8:00 a.m. – 12:00 p.m.

School Communicators Day Resolution

WHEREAS, transparent and effective communication about San Elizario Independent School District programs, services, plans, decisions and priorities to students, families, staff and community stakeholders are critically important; and

WHEREAS, school communicators work tirelessly to ensure meaningful parental and community involvement through communication to build support for schools and the children they serve; and

WHEREAS, school communicators commit to practicing communications/public relations in an ethical and comprehensive way that meets the needs and desires of all internal and external publics; and

WHEREAS, school communicators serve as a strategic partner to school boards and to district and school leaders to develop communication plans that support their missions and goals; and

WHEREAS, school communicators serve the critical function of an information liaison between a school district and its community, representing the district in various community organizations; and

WHEREAS, school communicators work to amplify the branding and key messages of a school district to new and existing audiences;

NOW, THEREFORE, BE IT RESOLVED that the San Elizario Independent School District Board of Trustees proclaims the second Friday in May (May 12, 2023) to be School Communicators Day; and

BE IT FURTHER RESOLVED that the San Elizario Independent School District Board of Trustees strongly encourages all members of our community to join in this observance, recognizing the dedication and hard work of school communicators.

APPROVED by the San Elizario Independent School District Board of Trustees this 10th day of May 2023

Sandra Licon, Board President	Axel Lopez, Board Trustee
Myrna Hernandez, Board Vice-President	Lorenzo Luevano, Board Trustee
Eduardo Chavez, Board Trustee	Dr. Jeannie Meza-Chavez, Superintendent

San Elizario ISD
P.O. Box 920
San Elizario, TX 79849
Phone 915.872.3900
Fax 915.872.3903

MEMORANDUM

To: Members of the Board of Trustees
From: Dr. Rogelio Segovia; Planning & Instruction Department
Subject: Resolution of the Board Regarding Policy FMH (LOCAL)—Student Commencement
Date: May 10, 2023

HISTORY:

Board policy FMH (LOCAL)-B currently states:

STUDENT ACTIVITIES COMMENCEMENT	FMH (LOCAL)
Commencement Exercises	To be eligible to participate in commencement activities and ceremonies, a student shall meet all state and local graduation requirements, including all applicable state testing. [See EI, EIF]

RATIONALE:

Policy FMH (LOCAL) states that students must meet all state and local graduation requirements, including all applicable state testing, in order to participate in commencement activities.

In the 2022-2023 school year, the results for STAAR testing, including the 5 EOC tests that seniors must pass to graduate, will be delayed. This is due to the statewide shift in spring 2023 to the new version of STAAR, called STAAR 2.0, which has numerous new item types.

The raw scores will be released on 5/22/23. These scores do not list the performance levels of Approaches, Meets, and Masters in order to make the official pass/fail determination for our senior re-testers. Performance levels are expected to be released on 5/31/22. This is also our graduation date and there will not be enough time to make the pass/fail determination for the affected seniors, who need the official EOC re-testing results prior to learning whether they will be eligible for graduation.

Due to the delayed STAAR test results, this adjustment to policy would only be applicable to the 2022-2023 school year and would allow affected seniors to participate in the commencement ceremony. These affected seniors must also be actively participating in an Individual Graduation Committee (IGC) to be considered.

BUDGET:

There is no budgetary impact.

ADMINISTRATIVE RECOMMENDATION:

It is recommended that the Board approve the adjustments to policy FMH (LOCAL) via this resolution.

Please check one: ☒ For approval ☐ Report / Information only ☐ Recognition only
☒ Attachment Included

Resolution of the Board Regarding Policy FMH (LOCAL), Student Activities: Commencement

WHEREAS, on 5/15/2011 the SEISD Board issued Policy FMH (LOCAL)-B, Update 90 regarding Student Activities: Commencement;

WHEREAS, the Texas Education Agency has implemented STAAR 2.0 testing during Spring 2023 which features multiple new item types and 100% online testing;

WHEREAS, the change to STAAR 2.0 testing will delay the release of early scale scores and performance levels for STAAR testing until 5/31/23, which is the graduation date for SEISD;

WHEREAS, this release of early scale scores and performance levels on 5/31/23 will not allow for graduation decisions to be reached in time for seniors who need these test results to determine eligibility for graduation;

WHEREAS, the Board finds a need to temporarily adjust local policy provisions regarding participation in student commencement exercises due to the delay in the official release of 2023 STAAR scores;

NOW, THEREFORE, BE IT RESOLVED that the Board of Trustees of San Elizario Independent School District makes the following temporary adjustments to policy FMH (LOCAL): Student Activities: Commencement:

- Seniors in the 2023 graduating class who are pending the results of Spring 2023 STAAR testing in order to be eligible for graduation will be permitted to participate in commencement exercises on 5/31/2023.
- The affected students must have completed all other graduation requirements except for passing the requisite STAAR tests and must be actively participating in the Individual Graduation Committee (IGC) process.

The authority granted by this resolution to adjust FMH (LOCAL) Student Activities: Commencement shall apply for the remainder of the 2022-2023 school year unless the Board takes further action.

Adopted this 10th day of May 2023, by the Board of Trustees.

Sandra Licon, Board President	Axel Lopez, Board Trustee
Myrna Hernandez, Board Vice-President	Lorenzo Luevano, Board Trustee
Eduardo Chavez, Board Trustee	Dr. Jeannie Meza-Chavez, Superintendent

San Elizario ISD
P.O. Box 920
San Elizario, TX 79849
Phone 915.872.3900
Fax 915.872.3903

MEMORANDUM

To: Members of the Board of Trustees
From: Jesus Martinez, Director-Support Services
Subject: April 2023, Non-Technology Fixed Asset Discards
Date: May 10, 2023

HISTORY: Campuses and departments periodically replace obsolete, broken or non-repairable items. We assist campuses and departments in removing these items to maximize space and minimize unnecessary item accumulation.

RATIONALE: To prevent unnecessary accumulation of obsolete, broken or non-repairable fixed assets at all our campuses and in departments, discard requests are now submitted on a monthly basis until further notice.

BUDGET: No budget impact

ADMINISTRATIVE RECOMMENDATION: For the Board of Trustees to declare the listed fixed assets as surplus or discards and authorize administration to sell or dispose of by any reasonable means.

Please check one: ☒ For approval ☐ Report / Information only ☐ Recognition only
☒ Attachment Included

Fixed Asset Discard List

[X] Other: CNS Dept.

[ ] Excell [ ] Loya

Campus (Please Check Appropriate Campus)

[ ] SE High School [ ] Middle School [ ] Alarcon [ ] Borrego [ ] Sambrano

	Room#	Description	Tag Number/Serial	Qty	Comments/Reasons
1	B-14G	Bottom Blodgett Oven	Serial #121996YA0783	1	Obsolete
2	B-14G	Bottom Blodgett Oven	No Serial # / No Tag	1	Obsolete
3	B-14G	Bodgett Top Oven	Tag# 26000054174	1	Obsolete
4	B-14G	Bottom Blodgett Oven	Tag# 2600005418	1	Obsolete
5	B-14G	Bottom Blodgett Oven	Tag# 165300	1	Obsolete
6	B-14G	Bottom Blodgett Oven	Tag #1655400	1	Obsolete
7	B-14G	Dishwasher Machine	Tag# 4210115118	1	Obsolete
8	B-14G	Dish Washer Machine	Serial# 85-1033650	1	Obsolete
9	B-14G	Mixer	Tag# 104400	1	Obsolete
10	B-14G	Freezer	Serial# 526851	1	Obsolete
11	B-14G	Milkbox	Tag # 104400	1	Obsolete
12	B-14G	Lunch Plates	No Tag	550	Obsolete
13	B-14G	Mixer, 60 QT	Tag 10600	1	Obsolete
14					
15					
16					
17					
18					
19					
20					
21					
22					
23					
24					
25					
26					
27					
28					
29					
30					

Date: 4-24-23

Authorized Campus Signature

Page_____ **of**_____

Special Meeting

Monday, April 17, 2023 5:30 PM
SEISD Administration Office, 1050 Chicken Ranch Road, San Elizario, TX 79849

1. **GENERAL FUNCTIONS**

1.A. Call Meeting to Order

Meeting was called to order at 5:30 p.m.

1.B. Roll Call

The following Board of Trustees were present:

Ms. Sandra Licon, Board President
Ms. Myrna Hernandez, Board Vice-President
Mr. Eduardo Chavez, Board Trustee
Mr. Axel Lopez, Board Trustee
Mr. Fernie Madrid, Board Trustee
Mr. Lorenzo Luevano, Board Trustee

Dr. Jeannie Meza-Chavez, Superintendent, was also in attendance.

1.C. Pledge of Allegiance

1.D. **San Elizario ISD Mission Statement**
San Elizario ISD's mission is to graduate students with skills to meet the demands of a changing world by promoting student success as non-negotiable, channeling resources to match learning needs of students, employ and retain a quality staff so that San Elizario is a proud, innovative and academically superior district.

2. **OPEN FORUM** (five-minute limit)

3. **DISTRICT RECOGNITIONS**

3.A. GEMS Softball Team - Two-Time Undefeated District Champions

Mr. Edgar Ponce, Interim Athletic Director, recognized students and coaches for their achievement.

3.B. SEHS Cheerleading Champions - UTEP Cheerleading Grand Champions

Mr. Edgar Ponce, Interim Athletic Director, recognized students and coaches for their achievement.

3.C. SEHS Wrestling - Regional Qualifiers

Mr. Edgar Ponce, Interim Athletic Director, recognized students and coaches for their achievement.

3.D. SEHS Softball - Keara Muñoz 100 Strikeouts

Mr. Angel Gonzalez, SEHS Varsity Softball Coach, recognized Keara Muñoz for her athletic achievement.

3.E. SEHS Skills USA - Leadership Skills Team placed 3rd place at State for Opening and Closing Ceremonies

Ms. Sandra Sanchez, CTE Coordinator, recognized students and advisors for their achievement.

3.F. Teacher and Employee of the Month for San Elizario High School

3.F.1. Karla Ruiz - Teacher of the Month

Ms. Brenda Pallares, Assistant Principal, recognized Ms. Karla Ruiz as the SEHS Teacher of the Month

3.F.2. Jose Fernandez Jr. - Employee of the Month

Mr. Jaime Parra, Assistant Principal, recognized Mr. Jose Fernandez Jr. as the SEHS Employee of the Month.

3.G. April is Assistant Principal's Month

Dr. Rogelio Segovia, Associate Superintendent, recognized all SEISD Assistant Principals for their continued support.

3.H. Prevention and Awareness of School-Aged Human Trafficking - Certified Trainers

Dr. Rogelio Segovia, Associate Superintendent, recognized the district employees who attained their certification to provide training on the Prevention and Awareness of School-Aged Human Trafficking.

3.I. School Librarian Month – April

Dr. Rogelio Segovia, Associate

Superintendent, recognized all SEISD District Librarians and Library Aides for their continued support.

3.J. Introduction of Ann M. Garcia-Enriquez School Improvement Coordinator - Mr. Troy Enriquez

Mr. Alexander Corona, Assistant Principal, introduced Mr. Troy Enriquez to the Board of Trustees.

4. **NEW BUSINESS / BOARD ACTION ITEMS**

4.A. Student Outcome Goals

4.A.1. San Elizario High School - Monitoring Student Progress

Ms. April Marioni, Principal, presented the Monitoring Student Progress presentation for San Elizario High School.

Mr. Eduardo Chavez asked if the test score information provided can be modified to show cohort yearly progression instead of showing a comparison of two cohorts (e.g. Algebra 1 cohort 2022 vs algebra 1 cohort 2023).

Dr. Jeannie Meza-Chavez asked Mr. Eduardo Chavez if he would like information showing results at the beginning of the year, middle of the year, and at the end of the year.

Mr. Eduardo Chavez stated it would be more useful to present information that shows how a cohort is progressing with the set of interventions at each campus throughout the school year.

No more questions.

4.B. Discussion and possible action to approve process and timeline for appointment for board vacancy, Place 3.

Dr. Jeannie Meza-Chavez presented the tentative timeline of appointment for board vacancy, Place 3.

Mr. Eduardo Chavez proposed to have candidate interviews on May 9, 2023 at 5:30 p.m.

Dr. Jeannie Meza-Chavez asked Legal Counsel to clarify on the canvassing and sworn in of elected trustees.

Ms. Priscilla de Mata, Legal Counsel, stated Board Election was cancelled due to all candidates being unopposed. Therefore, canvassing of results is not required. Ms. Priscilla de Mata stated the swearing in of newly elected trustees has to happen during or after the canvassing period which starts after May 6, 2023 election.

Dr. Jeannie Meza-Chavez proposed May 24, 2023, to swear in hte newly elected and appointed candidates.

Dr. Jeannie Meza Chavez proposed May 23, 2023, to swear in of newly elected and appointed candidates due to scheduled events conflicting with May 24, 2023.

Mr. Eduardo Chavez made a motion to approve process and timeline for appointment for board vacancy, Place 3; Application Acceptance April 24, 2023, to May 5, 2023; Candidate Interviews May 9, 2023, at 5:30 p.m.; Swear in of newly elected and appointed Trustees May 23, 2023 at 5:30 p.m.

Ms. Myrna Hernandez seconded the motion.

Motion Passed.

4.C. Discussion and possible action to approve naming of district park across from Alarcon Elementary on Socorro Rd to commemorate former Trustee, Mr. Fernie Madrid, for his 30 years of service on the San Elizario Independent School District Board of Trustees - Place 3

Ms. Sandra Licon stated Mr. Fernie Madrid called her to propose the park be named Fernie Madrid Eagle Park.

Mr. Eduardo Chavez made a motion to name the district park across from Alarcon Elementary on Socorro Rd to commemorate former Trustee, Mr. Fernie Madrid, as the Fernie Madrid Eagle Park.

Mr. Axel Lopez seconded the motion.

Motion passed.

4.D. Discussion and possible action to approve improvements and renovations to the district park across from Alarcon Elementary on Socorro Rd (pending formal name change as of the date of this agenda posting)

Mr. Norberto Rivas presented proposed improvements and renovations to the Fernie Madrid Eagle Park.

Mr. Eduardo Chavez wanted to know about the monument for Mr. Fernie Madrid which replicates the monument on the Pathway of Champions at San Elizario High School.

Mr. Jesus Martinez stated the monument would replicate the Pathway of Champions monument, but it would be smaller, and the center of the monument would have a dedication plaque to commemorate Mr. Fernie Madrid. It would also have 4 benches in each corner.

Mr. Eduardo Chavez asked if there is a rendering of the park billboard/sign.

Mr. Jesus Martinez stated there is no rendering, but they can work on one.

Ms. Sandra Licon asked if the park would be completely closed during renovations.

Mr. Jesus Martinez stated only the areas being renovated will be closed off. The other park areas will still be accessible.

Mr. Lorenzo Luevano asked if the new playground will be ADA compliant.

Mr. Jesus Martinez said they will renovate the playground to make it ADA compliant.

4.E. Consider and possible board action to approve resolution to commit fund balance for improvements and renovations to the district park across from Alarcon Elementary on Socorro Rd (pending formal name change as of the date of this agenda posting)

Mr. Eduardo Chavez made a motion to commit $350,000 of the fund balance for improvements and renovations to the Fernie Madrid Eagle Park as presented in item 4.D. not to include the 3rd basketball court.

4.F. Consider and possible board action to amend the 2022-2023 general fund budget for improvements and renovations to the district park across from Alarcon Elementary on Socorro Rd (pending formal name change as of the date of this agenda posting)

Mr. Norberto Rivas explained the option is to increase function 51 by $251,000 and function 81 by $99,000 to give a total of $350,000.

Mr. Eduardo Chavez made a motion to increase function 51 by $251,000 and function $99,000 for a total of $350,000 towards improvements and renovation to the Fernie Madrid Eagle Park.

Ms. Myrna Hernandez seconded the motion.

Motion passed.

4.G. Discussion on EISO Training and Academic Plan for the District

4.G.1. Discussion on Co-Support Model Districtwide

Dr. Jeannie Meza-Chavez stated she would like feedback of what the Board of Trustees would like to add to the Academic Plan for SEISD after attending the EISO Training.

Dr. Rogelio Segovia stated a Co-Support Model program is being worked on. Dr. Rogelio Segovia would like guidance on what else the Board would like to see on the Co-Support Model.

Dr. Jeannie Meza-Chavez stated STAAR Assessment Rating will not be released until September 2023.

Mr. Eduardo Chavez stated he would like to see a change on the reporting of Student progress. He stated he would like to have a workshop to revisit the District Goals. The workshop would help Board of Trustees understand what the expectation is for teachers and administrators. He stated the current reporting on student progress is not helpful.

Dr. Jeannie Meza-Chavez asked Ms. Renegar to speak regarding the district goals.

Ms. Lisa Renegar stated the current District Goals were establish 4 years ago when house bill 3 came about. Ms. Lisa Renegar stated the goals will be revamped and a new 5-year plan to measure student progress will be implemented.

Ms. Lisa Renegar stated current student progress is being compared with students in the same grade level from previous school year and it seems the Board of Trustees does not want that type of report.

Mr. Eduardo Chavez agreed. He stated he would like goals to show progress of individual students. For example, the 8th grade academic goal should be set based on the current 3rd grade students so they can be successful when reaching 8th grade.

Ms. Lisa Renegar stated MAP testing will help with the reporting of student progress.

Ms. Sandra Licon asked if the training regarding the district goals and progress reporting could be set as a workshop as it has been done in the past. This will give Board of Trustees an opportunity to ask questions, get a better understanding and provide feedback.

Dr. Jeannie Meza-Chavez asked Ms. Sandra Licon if she would like the workshop to be done during the upcoming May 2023 board meeting when the plan is presented or if she would prefer a subsequential workshop after the fact.

Ms. Sandra Licon stated she would like a workshop day to be set up in June 2023 after all the new board members have been sworn in.

Mr. Eduardo Chavez stated he would like to be part of the setting district goals discussion. This will help Board of Trustees understand how the goal will be achieved and the expectations

set for educators.

Dr. Jeannie Meza-Chavez stated the administration team is working on monitoring all student individual progress. This will help us show all SEISD students are progressing no matter their academic level.

No more questions.

4.H. Discussion on TASB visit scheduled for Thursday, April 20, 2023

Dr. Jeannie Meza-Chavez stated Leadership TASB is a group of Board Members across the state that visit only certain district as part of their learning. San Elizario Independent School District was chosen by Leadership TASB.

Dr. Jeannie Meza-Chavez presented the agenda for the Leadership TASB Visit.

Ms. Sandra Licon stated this is great opportunity to showcase our School District.

5. **CONSENT AGENDA** - Consider and possible Board action on

Ms. Myrna Hernadez made a motion to accept the consent agenda in its entirety.

Mr. Axel Lopez seconded the motion.

Motion passed.

5.A. Financial Reports

5.A.1. Tax Report

5.A.2. Financial Statements

5.A.3. Investment Report

5.A.4. Purchase orders exceeding $25,000.00

5.A.4.a. PO# 47638 – AREDI Enterprises- $42,279.00
PO# 47776 – Educational Products, Inc - $52,997.00
PO# 47778 – Dell Marketing L.P. - $96,370.00
PO# 47779 – Dell Marketing L.P. - $67,040.00
PO# 47780 – Dell Marketing L.P. -

$92,180.00
PO# 47781 – Dell Marketing L.P. - $227,940.00
PO# 47782 – CDW Government LLC - $48,650.00
PO# 47783 – CDW Government LLC - $29,885.00

5.B. Consider and possible Board action to approve Third Extension of Depository Contract with Wells Fargo Bank, N.A. (RFP#17-1031) for a two-year term through June 30,2025

5.C. Resolution to call on the Texas Legislature to reject Vouchers that reduce Public Education Funding

5.D. Resolution in Support of Military Connected Families

5.E. School Library Month Proclamation

5.F. Goal Progress Monitoring

5.F.1. **GPM 1.2** - 3rd Grade Math Progress

5.F.2. **GPM 1.3 -** 8th Grade Math Progress

5.F.3. **GPM 1.4 -** High School Math (Algrebra I) Progress

5.G. El Paso Child Guidance Center Memorandum of Understanding

5.H. Active Internet Technologies, dba Finalsite 3-year agreement

5.I. 2023-2024 TEKS Certification and Allotment Form

5.J. Consider approval of minutes for the following:

5.J.1. March 8, 2023 - Regular Board Meeting

5.K. Consider disposal of surplus property declared obsolete and unnecessary by Superintendent or her Designee, to include disposal of broken furniture and technology equipment according to Administrative discretion and by any reasonable means.

5.K.1. Support Services Department

5.K.2. Technology Department

6. **PRESENTATION / REPORTS / INFORMATION**

6.A. School Board Continuing Education Report (Presentation)

Board President Sandra Licon recited the School Board Continuing Education Report.

None of the Board of Trustees were deficient in meeting the training required.

6.B. Board Training (Information)

6.B.1. Psychological First Aid Training Certification

6.B.1.a. Online Training available: https://learn.nctsn.org/enrol/index.php?id=596

6.B.2. FWTSBA and TASB Spring Workshop | Thursday May 25, 2023

6.B.3. 2023 Annual MASBA Conference - September 14 to 16 | San Antonio, TX (Information)

6.B.4. 2023 TASA | TASB Convention txEDCON 23 - September 29 to October 1 | Dallas, TX (Information)

6.C. TASB 2022 - 24 Advocacy Agenda submissions period March 1, 2023 - June 15, 2023 (Information)

6.D. Teacher Incentive Allotment Expansion (Information)

6.E. Opportunity Now (Information)

6.F. Meal Service Update (Information)

7. **EXECUTIVE SESSION**

The Board entered into a closed meeting at **7:14 p.m.** to discuss personnel matters, to consult with attorney, to discuss real estate matters, to consider recommendations for hiring of personnel or termination of personnel and other personnel matters under Sec. 551.071, 551.072 and 551.074, Texas Gov. Code:

7.A. Discussion on Employee / Board / Superintendent Communication

7.B. Discussion regarding the Administration's recommendation for the Athletic Director position

7.C. Review Board Operating Procedures and discuss possible revisions/updates

7.D. Discussion on the employment of the following:

7.D.1. Discussion on renewal of teacher and administrator contracts for 2023 - 2024 school year for the following:

7.D.1.a. Probationary Contracts

7.D.1.b. Term Contracts

7.D.1.c. Certified Administrators

7.D.1.d. Non - Certified Administrators

7.D.2. Non - Contractual Personnel

7.D.2.a. Employees recommended for letter of reasonable assurance for 2023 - 2024 school year

7.E. Discussion regarding Superintendent's evaluation date in lieu of expected delay of assessment information

7.F. Discussion regarding lease agreement between San Elizario ISD and Organizacion Progresiva of San Elizario

7.G. Discussion with legal counsel regarding HB 4735 pending in the state legislature

8. **THE BOARD WILL RETURN TO OPEN SESSION TO TAKE POSSIBLE ACTION ON THE MATTERS DISCUSSED IN EXECUTIVE SESSION**

The Board returned to open session at **9:25 pm** to take possible action on the matters discussed in Executive Session.

8.A. Discussion and possible action to approve the Administration's recommendation for the Athletic Director position

Mr. Eduardo Chavez made a motion to approve the Administration’s recommendation for the Athletic Director position, Mr. Cesar Morales.

Mr. Axel Lopez seconded the motion.

Motion passed.

8.B. Discussion and possible action to approve revisions and updates to the Board Operating Procedures

No action.

8.C. Discussion and possible board action of renewal on teacher and administrator contracts for the 2023 - 2024 school year for the following:

Ms. Blanca Cruz presented the renewal on teacher and administrator contracts for the 2023-2024 School year for items 8.C.1 TO 8.C.4.

Ms. Myrna Hernandez made a motion approve the renewal on teacher and administrator contracts for the 2023-2024 School year for items 8.C.1 TO 8.C.4 as presented.

Mr. Axel Lopez seconded the motion.

Motion Passed.

8.C.1. Probationary Contracts

8.C.2. Term Contracts

8.C.3. Certified Administrators

8.C.4. Non - Certified Administrators

8.D. Non - Contractual Personnel

8.D.1. Employees recommended for letter of reasonable assurance for 2023 - 2024 school year.

Ms. Blanca Cruz presented the employees recommended for letter of reasonable assurance for 2023 - 2024 school year.

Mr. Eduardo Chavez made a motion to approve the employees recommended for letter of reasonable assurance for 2023 - 2024 school year as presented.

Ms. Myrna Hernandez seconded the motion.

Motion Passed.

8.E. Consider and possible action to approve 1st Amendment to the lease agreement between San Elizario ISD and Organizacion Progresiva of San Elizario

Ms. Priscilla de Mata recommended the board to approve the 1st Amendment to the lease agreement between San Elizario ISD and Organizacion Progresiva of San Elizario as discussed in closed session

Mr. Eduardo Chavez made a motion to approve the 1st Amendment to the lease agreement between San Elizario ISD and Organizacion Progresiva of San Elizario as discussed in closed session.

Ms. Myrna Hernandez seconded the motion.

Motion passed.

9. **NEXT MEETING DATE:**
Special Board Meeting|Place 3 Candidate Interview: Tuesday, May 9, 2023 at 5:30 pm

Regular Board Meeting: Wednesday, May 10, 2023, at 5:30 p.m.

Special Board Meeting|Oath to Office: Tuesday, May 23, 2023

10. **ADJOURNMENT**

Mr. Eduardo Chavez made motion to adjourn the meeting at **9:31 p.m.**

Ms. Myrna Hernandez seconded the motion.

Motion Passed.

_____
Board President

_____
Board Vice-President

San Elizario ISD
P.O. Box 920
San Elizario, TX 79849
Phone 915.872.3900
Fax 915.872.3903

MEMORANDUM

To: Members of the Board of Trustees
From: Ms. Aggie Reyes, Director of Child Nutrition Services
Subject: April 2023 – Meal Service Update
Date: May 10, 2023

HISTORY: The Child Nutrition Services Department will provide a monthly report to the Members of the Board of Trustees.

RATIONALE: The Child Nutrition Services Department served 78,941 student meals in the month of April 2023. This count includes breakfast, lunch, supper, and after-school snacks.

Child Nutrition Services involvement in student success is top priority. In the Month of April 2023, we participated in the following school events:

- Special meals were prepared for High School athletes & UIL competitors traveling out of town.
- High school prepared a spa day themed meal for seniors.
- CNS received a donation of piñatas that were distributed to all schools for student activities.

It is our absolute pleasure to serve the SEISD community.

BUDGET: No budget impact.

ADMINISTRATIVE RECOMMENDATION: No Recommendation

Please check one: ☐ For approval ☒ Report / Information only ☐ Recognition only
☐ Attachment Included

San Elizario ISD
P.O. Box 920
San Elizario, TX 79849
Phone 915.872.3900
Fax 915.872.3903

MEMORANDUM

To: Members of the Board of Trustees
From: Dr. Jeannie Meza-Chavez, Superintendent and Dr. Rogelio Segovia, Associate Superintendent
Subject: At-a-Glance End of Year Campus Award Ceremony Schedule
Date: May 10, 2023

HISTORY: Please find the dates, times, and grade level campus end-of-year award ceremony schedule for your review. These are based on the dates and times submitted by the school principals.

RATIONALE: Be advised regarding the celebratory events for our students happening at each one our campuses.

BUDGET: Each ceremony is funded through the appropriate fund designated in their respective campus improvement plans.

ADMINISTRATIVE RECOMMENDATION: The administration recommends that the boards of trustees advise the superintendent's office if they are attending any of the noted campus ceremonies so appropriate accommodations can be made.

Please check one: ☐ For approval ☒ Report / Information only ☐ Recognition only
☒ Attachment Included

2022-23 End of Year Campus Award Ceremony Schedule

School Campus	Dates – Grade Level – Time
Loya Primary	May 31 – PreK4 – 8:15 am | 9:30 am | 1:00 pm June 01 – PreK4 – 8:15 am June 01 – PreK3, ECSE & Collaborative – 9:30 am June 01 – PreK3 – 1:00 pm
Sambrano Elementary	May 25 – 1st Grade – 8:30 am | 9:30 am | 1:30 pm May 26 – 2nd Grade – 8:30 am | 9:30 am | 1:30 pm May 30 – Kindergarten – 8:30 am | 9:30 am | 1:30 pm
Alarcon Elementary	May 30 – 3rd Grade – 9:00 am May 30 – 4th Grade – 1:00 pm May 31 – 5th Grade – 1:00 pm June 01 – 6th Grade – 1:00 pm
Borrego Elementary	May 30 - 3rd Grade – 9:00 am May 30 - 4th Grade – 1:00 pm June 01 - 5th Grade – 9:00 am June 01 - 6th Grade – 1:00 pm
Garcia-Enriquez Middle School	June 01 – 8th Grade Transition Ceremony – 5:30 pm June 02 – 8th Grade – 9:30 am June 02 – 7th Grade – 11:30 am
San Elizario High School	May 13 – 07:00 pm – Prom May 24 – 05:30 pm – Athletic Banquet May 26 – 10:00 am – Senior Field Trip May 28 – 08:00 am – Senior Mass May 30 – 09:00 am – Senior Graduation Campus Walk May 31 – 02:00 pm – Rose Ceremony (11th & 12th) May 31 – 05:00 pm – Senior Golden Eagle Ceremony June 02 – 07:00 pm – Senior Graduation

Revised 05/04/2023
Schedule Subject to Change