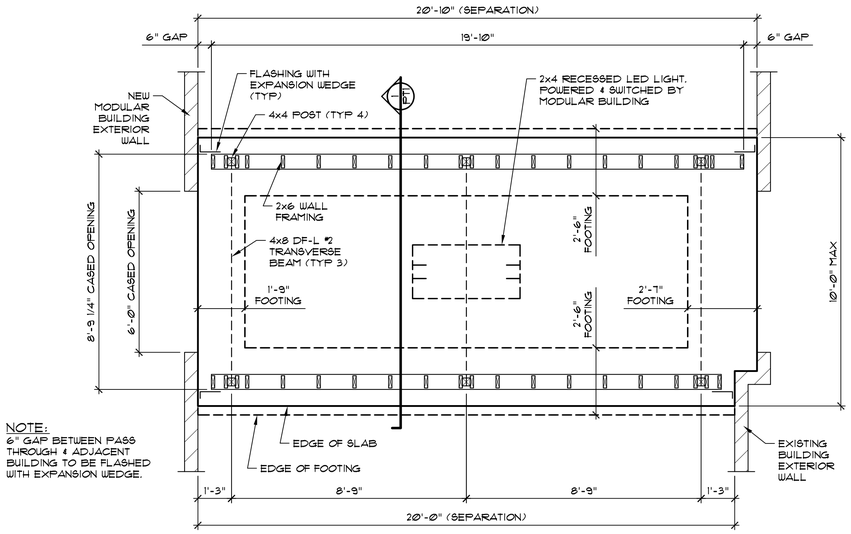

NOTE:
6" GAP BETWEEN PASS THROUGH & ADJACENT BUILDING TO BE FLASHED WITH EXPANSION WEDGE.

PASS THROUGH PLAN
SCALE: 3/8" = 1'-0"

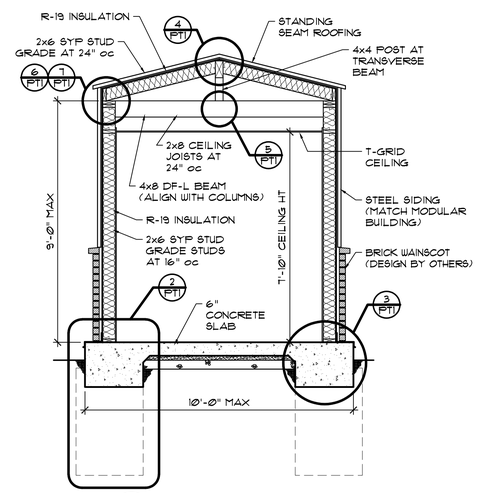

1 PT1 DETAIL
SCALE: 3/8" = 1'-0" (SECTION)

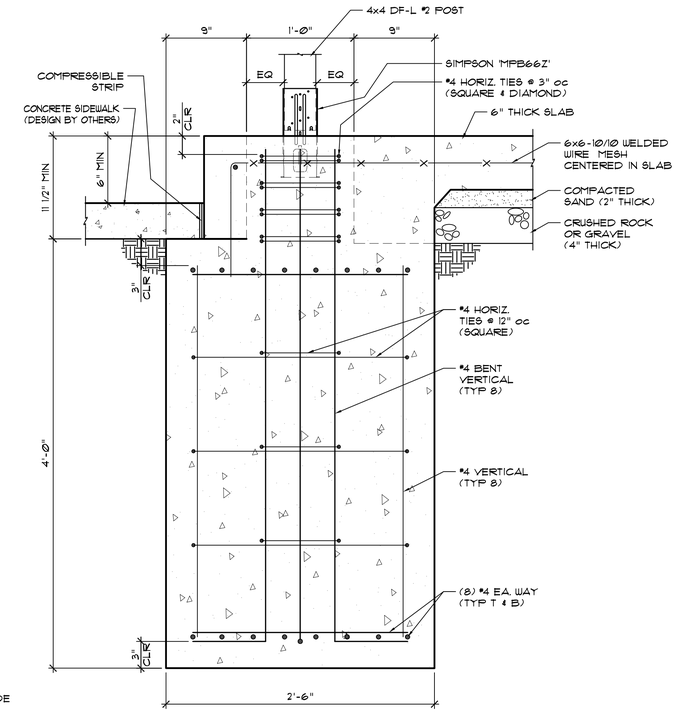

2 PT1 DETAIL
SCALE: 1-1/2" = 1'-0" (FOOTING/STEMWALL)

GENERAL FRAMING NOTES

1.) FOUNDATION DESIGN LOADS:
ROOF LIVE LOAD = 20 PSF
WIND LOAD:
a.) IMPORTANCE FACTOR: 1.00
b.) ULT. WIND SPEED: 120 MPH, EXP 'C'
c.) PRESSURE: 17.6 PSF
EARTHQUAKE DESIGN DATA:
a.) SEISMIC IMPORTANCE FACTOR: 1.00
RISK CATEGORY: 'II'
b.) MAPPED SPECTRAL RESPONSE ACCELERATIONS: Ss=0.065g, S1=0.034g
c.) SITE CLASS: 'D'
d.) SPECTRAL RESPONSE COEFFICIENTS: SDS=0.069, SD1=0.054
e.) SEISMIC DESIGN CATEGORY: 'A'
f.) BASIC SEISMIC FORCE RESISTING SYSTEM: CANTILEVERED COLUMN SYSTEM DETAILED TIMBER FRAMES
0.046 W
h.) SEISMIC RESPONSE COEFFICIENT: Cs = 0.046
i.) RESPONSE MODIFICATION FACTOR: R = 1.5
j.) ANALYSIS PROCEDURE USED: EQUIVALENT LATERAL FORCE ANALYSIS
k.) REDUNDANCY FACTOR USED: 1.3

2.) ALL WORK MATERIALS SHALL BE IN STRICT COMPLIANCE WITH THE LATEST EDITION OF THE IBC AND ALL LOCAL ORDINANCES.

2.) THE CONTRACTOR SHALL VERIFY ALL DIMENSIONS AND CONDITIONS PRIOR TO CONSTRUCTION. THE ENGINEER SHALL BE NOTIFIED OF ANY DISCREPANCIES.

3.) ALL 2x DIMENSIONAL LUMBER SHALL BE DOUGLAS FIR LARCH NO. 2 OR BETTER UNLESS INDICATED OTHERWISE.

4.) ALL WOOD CONNECTIONS MUST CARRY THE CAPACITY OF THE MEMBER. THE CONTRACTOR IS RESPONSIBLE FOR ALL CONNECTIONS. IF OTHER THAN STANDARD CONNECTIONS ARE REQUIRED, CONTACT PROJECT ENGINEER FOR ASSISTANCE. USE SIMPSON OR OTHER ICC LISTED CONNECTIONS.

5.) ANY WOOD IN CONTACT WITH CONCRETE OR MASONRY SHALL BE PRESSURE TREATED WITH PRESERVATIVE.

6.) ALL WOOD CONNECTORS SHALL BE INSTALLED WITH ALL REQUIRED FASTENERS IN COMPLIANCE WITH THEIR LISTING.

7.) ALL WOOD MEMBERS SHALL BE FASTENED IN COMPLIANCE w/ 2021 IBC TABLE. UNLESS NOTED OTHERWISE.

8.) IF SOFFIT IS APPLIED, CANOPY SHALL BE VENTILATED WITH SCREENED SOFFIT VENTS (1 SQ. FT. OF VENT PER 150 SQ. FT. OF ROOF AREA)

9.) MINIMUM ALLOWABLE CONCRETE COMPRESSIVE STRENGTH SHALL BE 3000 PSI AT 28 DAYS. MAXIMUM AGGREGATE SIZE IS 1". MAXIMUM AIR ENTRAINMENT IS 3%. CEMENT SHOULD BE TYPE II OR TYPE III.

10.) SOIL BEARING CAPACITY IS ASSUMED TO BE 2000 PSF. ALL SOIL PREPARATION AND FOOTING PLACEMENT SHALL COMPLY WITH RECOMMENDATIONS FOUND IN GEOTECHNICAL REPORT (ECS SOUTHWEST, LLP - JOB NO. 20:2341, DATED JULY 30, 2025).

11.) ALL MACHINE BOLTS TO BE ASTM A307.

12.) ALL FASTENERS IN CONTACT WITH PRESERVATIVE TREATED LUMBER SHALL BE HOT-DIPPED GALVANIZED OR STAINLESS STEEL.

13.) ALL SIMPSON CONNECTORS IN CONTACT WITH PRESERVATIVE TREATED LUMBER SHALL HAVE 'Z - MAX' FINISH.

14.) ACUMEN ENGINEERING WILL NOT INSPECT THE INSTALLED STRUCTURE. THE OWNER AGREES TO INDEMNIFY ACUMEN ENGINEERING FOR DAMAGES ARISING FROM IMPROPER INSTALLATION.

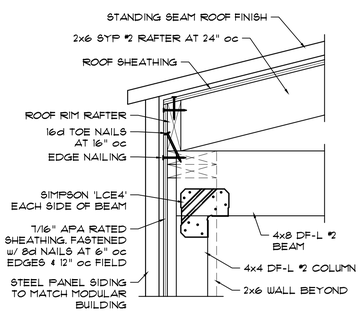

6 PT1 DETAIL
SCALE: 1-1/2" = 1'-0" (COLUMN TO TRANSVERSE BEAM)

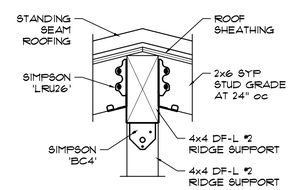

4 PT1 DETAIL
SCALE: 1-1/2" = 1'-0" (RIDGE)

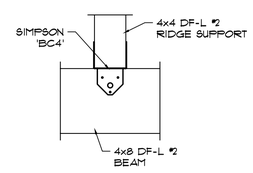

5 PT1 DETAIL
SCALE: 1-1/2" = 1'-0" (RIDGE SUPPORT)

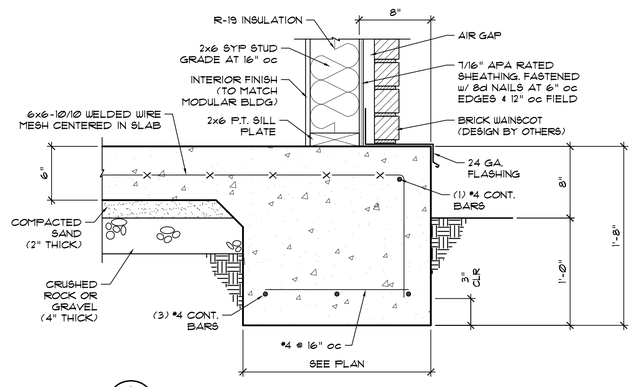

3 PT1 DETAIL
SCALE: 1-1/2" = 1'-0" (SLAB EDGE)

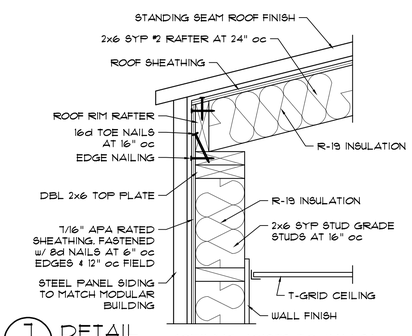

7 PT1 DETAIL
SCALE: 1-1/2" = 1'-0" (CEILING JOISTS TO WALLS)

STATE OF TEXAS
ADAM M. NIEMAN
140473
LICENSED
PROFESSIONAL ENGINEER
10/22/2025
SEAL

PE SEAL IS ONLY VALID FOR SITE ADDRESS SHOWN IN THE TITLE BLOCK.
WET STAMPED PE SEAL IS ONLY VALID WHEN RED w/ BLUE SIGNATURE (COPIES NOT PERMITTED)
ELECTRONIC SIGNATURE ONLY VALID WITH A VALID CERTIFICATE

TITLE TO THESE PLANS REMAINS WITH ACUMEN ENGINEERING DESIGN, LLC. THE INFORMATION HEREIN IS FOR THE SOLE USE OF THE CUSTOMER LISTED AND SHALL BE HELD CONFIDENTIAL. RE-USE OR REPRODUCTION IN WHOLE OR IN PART IS PROHIBITED.

ACUMEN ENGINEERING DESIGN, LLC
12008 NORTH 144TH AVENUE
SURPRISE, ARIZONA 85379
(801) 571 - 9877

CUSTOMER
PACIFIC MOBILE STRUCTURES
5650 DORANDO BLUFFS ROAD
SAN MARCOS, TEXAS
(830) 212-4608

PROJECT
ENCLOSED PASSAGEWAY DESIGN
WESTHOFF ISD CLASSROOM
244 LYNCH AVENUE
WESTHOFF, TEXAS 77994

VERSION NO	DATE	BY

DATE: 10/2025
SCALE: SHOWN
DWN: A.N.
JOB: 250835
SHEET
PT1
OF 1 SHEET